Office of Manufactured Housing

1110 WEST WASHINGTON, SUITE 280
PHOENIX, ARIZONA 85007
PHONE: 602-771-1000
WWW.AZHOUSING.GOV

NOTICE

The red stamped plans indicate approval of the building design per the standards and codes adopted by the Department. Fabrication of the building illustrated in the approved plans may commence by the licensed manufacturer.

The approval grants fabrication of the structure only. A separate installation approval and permit are required prior to the placement of the structure at the site. Installation plan submission requirements and permitting are available on the ADOH website.

1110 WEST WASHINGTON ST, SUITE 280
PHOENIX, ARIZONA 85007
Office: (602) 771-1099
Website: housing.az.gov
Email: ADOHPlanReview@azhousing.gov

PLAN REVIEW APPLICATION

This application must be submitted as this fillable PDF format - Fill out this form and save as a non-secured PDF to submit. Printed copies will be rejected.

(Area A) LICENSED MANUFACTURERS ONLY:

(Area A.1) Compliance Control Manual: ☐ Factory Address: 5345 North East Belt Rd North Las Vegas NV

(Area A.2) Factory Built Building - New Building plans. ☐ Model Stock Unit ☐ Model number or Serial number: _____

-OR-

☐ Site-specific | Foundation within a designated flood area? ☐Y/N☐ | Within a freezing climate? ☐Y/N☐ | If Yes | Frost Depth: _____
Soil Classification: _____ | Soil Bearing Capacity: _____ | Ground snow Load: _____

(Area A.3) Factory Built Building - Reconstruction. ☐ Requires prior evaluation by OMH staff. Applications submitted without a letter from OMH staff will be canceled. Contact Plan Review Staff for assistance.

(Area A.4) Supplement Plans: ☐ Supplemental to originally approved OMH plans. (This is for minor changes to a few plan sheets, if the changes are too drastic and require a new review the application will be canceled and a new application will be required for the new review) | Select One ☐ F-_____ ☐ H- _____

(Area B) Scope of Work: **All applications shall include a defined scope of work:** (IBC-2018-105.3.1)	See page G1.2
(Area C) Manufacturer License Number: 9080 License Type: M-9E	Dealer License Number: 9040 License Type: D-_____
(Area D) **Owner / Applicant's Name** *(Dealer, Installer, Homeowner, or Other)* **Mailing Address & Telephone Number**	Boxabl Inc. 5345 East North Belt Rd North Las Vegas NV 89115
(Area E) **Contact Name & E-mail Address (Required)**	Alex Michaels alex.michaels@boxabl.com
(Area F) **If Site-Specific : Installation Site Address/ Assessors Parcel Number**	TBD TBD

Important Notes:
- ✓ Review the Plan Review page of the OMH website for updated checklists, applications, instructions, and our e-Licensing Portal to submit all plan review applications for review.
- ✓ Clicking the e-Licensing portal 'Submit' button verifies all required documents have been submitted with the application. Uploaded files may not be altered/modified after clicking 'Submit".
- ✓ All plan review applications will receive two attempts to be accepted in as complete; applications that are not accepted in as complete with two attempts will be forfeited and a new application shall be made.

DO NOT SEND PLANS, DETAILS, OR CALCULATIONS BY EMAIL.

SECTION BELOW FOR OFFICE USE ONLY

RECEIPTING		APPROVAL STAMP
Submittal Fee	$ 700.00	STATE OF ARIZONA REFER TO SHEET #1 Apr 03 2026 Review of this document does not authorize or approve any omission or deviation from the applicable standards F9080-10
Payment No.	7157585	
Application No.	AZ-0030345	
Additional Hours	(2) X $125.00 Per Hour	
Balance Fees Owed	$250.00 ~~$ 0.00~~	

STUDIO CASITA
TWO DOOR - MODEL BXB-000009
(ARIZONA - FOAM WEDGE ROOF)

-NOTICE-
This factory-built building is approved for dealer stock and complies with the minimum requirements of the adopted building code as to occupancies, separation, roof and floor loads. The authority having jurisdiction of the site location shall consider location and intended use as to actual requirements necessary.

STATE OF ARIZONA REVIEWED for CODE COMPLIANCE
Review does not imply compliance with the requirements of local codes and ordinances governing zoning, fire zones, fire separation, and site development requirements.

Date_04/03/2026_By_SG_
Approval No._F9080-10___
Sheet 1 of__29___

Review of this document does not authorize or approve any omission or deviation from applicable codes and standards.

PROJECT CONTACTS

OWNER
BOXABL
5345 EAST NORTH BELT ROAD
LAS VEGAS, NV 89115

ARCHITECT
SEVAN DESIGN SOLUTIONS P.C.
3025 HIGHLAND PARKWAY, SUITE 850
DOWNERS GROVE, ILLINOIS
630-294-4583
JOE DEFILIPPIS

ELECTRICAL ENGINEER
DICKERSON ENGINEERING, INC
3343 NORTH RIDGE
ARLINGTON HEIGHTS, IL 60004
847-966-0290
GREGORY DOFFIN

MECHANICAL & PLUMBING ENGINEER
WCW ENGINEERS, INC.
760 CREEL DRIVE
WOOD DALE, IL 60191
630-595-8800
JOSEPH G. THOMAS

STRUCTURAL ENGINEER
SIP ENGINEERING CONSULTANTS, LLC
14845 SW MURRAY SCHOLLS DR
SUITE 110 PMB 306
BEAVERTON, OR 97007
503-564-4178
MIKE NELSON

GENERAL NOTES

THE ARCHITECT AND HIS CONSULTANTS DO NOT WARRANTY OR GUARANTEE THE COMPLETENESS OF THE WORK BEYOND A REASONABLE DILIGENCE. IF ANY ERRORS, DISCREPANCIES, OR OMISSIONS ARE FOUND TO EXIST IN THE WORK PRODUCT, THE ARCHITECT SHALL BE PROMPTLY NOTIFIED SO THAT HE MAY HAVE THE OPPORTUNITY TO TAKE WHATEVER STEPS NECESSARY TO RESOLVE THE ISSUE. FAILURE TO PROMPTLY NOTIFY THE ARCHITECT OF SUCH CONDITIONS, SHALL ABSOLVE THE ARCHITECT FROM ANY RESPONSIBILITY OF SUCH FAILURE. ACTION TAKEN WITHOUT THE KNOWLEDGE AND CONSENT OF THE ARCHITECT, IN CONTRADICTION TO THE WORK PRODUCT, OR THE RECOMMENDATIONS OF THE ARCHITECT SHALL BECOME THE RESPONSIBILITY OF THE PARTIES RESPONSIBLE FOR TAKING SUCH ACTION.

THESE DRAWINGS WERE PREPARED BASED ON THE ASSUMPTION THAT ANY CONTRACTOR, SUBCONTRACTOR, SUPPLIER, OR VENDOR INVOLVED IN THE CONSTRUCTION OF THE WORK DESCRIBED HEREIN HAS EXPERIENCE IN THEIR RESPECTIVE AREAS OR DISCIPLINES THAT MAKE UP THE SCOPE OF THE PROJECT.

MANUFACTURERS COMPLIANCE CERTIFICATE (INSIGNIA) CAN BE FOUND BELOW THE ELECTRICAL PANEL ON THE EXTERIOR WALL AND SECURED WITH RIVETS DIRECTLY TO THE STEEL CLADDING.

1 THESE UNITS ARE PREFABRICATED FACTORY BUILT DWELLING UNITS. PLUMBING, ELECTRICAL, & HVAC ARE PRE-INSTALLED, AND ARE CONNECTED TO INCOMING UTILITIES WHEN THE UNIT IS SET ON SITE.

FOUNDATION SYSTEM IS PERMITTED & INSTALLED SEPARATELY BY THE UNIT OWNER.

THIS SET IS INTENDED TO BE USED IN CONJUNCTION WITH THE MANUFACTURERS PANEL DRAWINGS AND STRUCTURAL DRAWINGS.

REGISTERED ARCHITECT CERTIFICATE NO. 34195 JOSEPH A. DEFILIPPIS DATE SIGNED 4/13/26 ARIZONA, U.S.A.
Exp. 9/30/26

BUILDING DATA

OCCUPANCY CLASSIFICATION:	SINGLE FAMILY DWELLING 2 1
TOTAL BUILDING AREA:	361 SQ FT
BUILDING HEIGHT:	10'-9"
CONSTRUCTION TYPE:	V-B (STRUCTURAL INSULATING PANELS)
CLIMATE ZONE:	2, 3, 4 OR 5

FLOOR, ROOF + WALL SIP PANEL APPROVALS:
- NFPA 286 CORNER BURN TEST
- ASTM E84 NON-COMBUSTIBLE MATERIAL CONSTRUCTION
- ICC EVALUATION REPORT ESR 4725

BUILDING INFORMATION

ADDRESS:

ADDRESS:	1234 STREET
CITY:	CITY
COUNTY:	COUNTY
STATE:	ARIZONA

BUILDING CODE:
- BUILDING CODE: 2018 INTERNATIONAL RESIDENTIAL CODE (IRC) 2
- ELECTRICAL CODE: 2017 NATIONAL ELECTRICAL CODE (NEC) 2
- ENERGY CODE: 2018 INTERNATIONAL ENERGY CONSERVATION CODE (IECC)

DATE:	REV:	DESCRIPTION:
03-13-26	1	PLAN REVIEW COMMENTS
04-03-26	2	PLAN REVIEW COMMENTS

PROFESSIONAL SEAL:
I HEREBY CERTIFY THAT THESE DRAWINGS HAVE BEEN PREPARED UNDER MY DIRECT SUPERVISION AND THAT TO THE BEST OF MY KNOWLEDGE AND BELIEF COMPLY WITH THE CODES AND ORDIANCES FOR PREFABRICATED DWELLING UNITS.

sevan
DESIGN SOLUTIONS, P.C.
Corporate Office:
3025 Highland Parkway | Suite 850
Downers Grove, IL 60515
Contact Information:
info@sevansolutions.com
www.sevansolutions.com

INTEGRITY | RESPECT | TEAMWORK | EXCELLENCE | CHARITY

SHEET MANAGEMENT	
SHEET FORMAT:	ARCH C
SHEET SCALE:	1:3
CREATED BY:	KD
RELEASE DATE:	12/10/2025

SHEET: G1.0

MODEL: BXB-000009 2 DOOR CASITA (ARIZONA)

ROOF TYPE: FOAM WEDGE ROOF

BOXABL INC.
5345 EAST NORTH BELT ROAD
NORTH LAS VEGAS, NV 89115, USA
+1(702) 500-9000 HELLO@BOXABL.COM

PROPRIETARY AND CONFIDENTIAL
THE INFORMATION CONTAINED IN THIS DRAWING IS THE SOLE PROPERTY OF BOXABL INC. ANY REPRODUCTION IN PART OR AS A WHOLE WITHOUT THE WRITTEN PERMISSION OF BOXABL INC. IS PROHIBITED.

BOXABL

DRAWING INDEX

Sheet Number	Sheet Title	REVISIONS 1	2	3	4	5	6
GENERAL							
G1.0	COVER SHEET	1					
G1.1	DRAWING INDEX	1					
G1.2	SCOPE OF WORK AND STRUCTURAL DESIGN CRITERIA						
G2.0	ENERGY CALCS						
G2.1	ENERGY CALCS						
ARCHITECTURAL							
A1.0	FLOOR PLAN & ROOF PLAN	1					
A1.1	SCHEDULES	1					
A2.0	EXTERIOR ELEVATIONS - FOAM WEDGE ROOF	1					
A3.0	WALL SECTIONS - FOAM WEDGE ROOF						
PLUMBING							
P1.0	PLUMBING NOTES, SYMBOLS & ABBREVIATIONS	1					
P2.0	PLUMBING PLANS (SHOWER)	1					
P2.2	PLUMBING VENT PLANS	1					
P2.3	PLUMBING DRAIN PIPE TERMINATION PLANS						
P3.0	PLUMBING DETAILS (SHOWER)						
MECHANICAL							
M1.0	MECHANICAL NOTES SYMBOLS & ABBREVIATIONS						
M2.0	MECHANICAL PLAN						
M3.0	MECHANICAL DETAILS						
ELECTRICAL							
E1.0	SYMBOL LIST, GENERAL NOTES & SPECIFICATIONS	1					
E2.0	ELECTRICAL PLANS	1					
E3.0	ELECTRICAL SCHEDULES	1					
STRUCTURAL							
S1	DESIGN CRITERIA & GENERAL NOTES	1					
S2	WALL PLAN, ELEVATIONS & SECTIONS						
S3	FOUNDATION PLAN & DETAILS						
S4	FOUNDATION CONNECTION LAYOUT						
S5	FLOOR, WALL, ROOF PLAN & DETAILS						
S5.1	INTERIOR PARTITION WALLS						
S6	STEEL BEAM HINGES						
S7	STEEL BEAM ENDPLATES						
S8	TAPERED INSULATION PLAN & DETAIL	1					
S9	TAPERED ROOF INSULATION ANCHOR LAYOUT						

STATE OF ARIZONA
REFER TO SHEET #1

Apr 03 2026

Review of this document does not authorize or approve any omission or deviation from the applicable standards

F9080-10

REGISTERED ARCHITECT
CERTIFICATE NO. 34195
JOSEPH A. DEFILIPPIS
DATE SIGNED 3-12-26
ARIZONA, U.S.A.
Exp. 9-30-26

DATE:	REV:	DESCRIPTION:
03-13-25	1	PLAN REVIEW COMMENTS

PROFESSIONAL SEAL:

I HEREBY CERTIFY THAT THESE DRAWINGS HAVE BEEN PREPARED UNDER MY DIRECT SUPERVISION AND THAT TO THE BEST OF MY KNOWLEDGE AND BELIEF COMPLY WITH THE CODES AND ORDIANCES FOR PREFABRICATED DWELLING UNITS.

sevan
DESIGN SOLUTIONS, P.C.

Corporate Office:
3025 Highland Parkway | Suite 850
Downers Grove, IL 60515

Contact Information:
info@sevansolutions.com
www.sevansolutions.com

INTEGRITY | RESPECT | TEAMWORK | EXCELLENCE | CHARITY

SHEET MANAGEMENT	
SHEET FORMAT:	ARCH C
SHEET SCALE:	1:3
CREATED BY:	KD
RELEASE DATE:	12/10/2025

SHEET: G1.1

MODEL: BXB-000009 2 DOOR CASITA (ARIZONA)

ROOF TYPE: FOAM WEDGE ROOF

BOXABL INC.
5345 EAST NORTH BELT ROAD
NORTH LAS VEGAS, NV 89115, USA
+1(702) 500-9000 HELLO@BOXABL.COM

PROPRIETARY AND CONFIDENTIAL
THE INFORMATION CONTAINED IN THIS DRAWING IS THE SOLE PROPERTY OF BOXABL INC. ANY REPRODUCTION IN PART OR AS A WHOLE WITHOUT THE WRITTEN PERMISSION OF BOXABL INC. IS PROHIBITED.

BOXABL

Generated by RES*check-Web* Software

Compliance Certificate

Project Boxabl - Arizona - Zone 2 - Cont. R Value

Energy Code:	**2018 IECC**
Location:	**Pima County, Arizona**
Construction Type:	**Single-family**
Project Type:	**New Construction**
Project SubType:	**None**
Orientation:	**Bldg. faces 0 deg. from North**
Conditioned Floor Area:	**324 ft2**
Glazing Area	**10%**
Climate Zone:	**2 (1999 HDD)**
Permit Date:	
Permit Number:	
All Electric	**true**
Is Renewable	**false**
Has Charger	**false**
Has Battery:	**false**
Has Heat Pump:	**true**

Construction Site: Owner/Agent: Designer/Contractor:

Compliance: Passes using performance alternative

Compliance: **3.6% Better Than Code**

Slab-on-grade tradeoffs are no longer considered in the UA or performance compliance path in REScheck. Each slab-on-grade assembly in the specified climate zone must meet the minimum energy code insulation R-value and depth requirements.

Envelope Assemblies

Assembly	Gross Area or Perimeter	Cavity R-Value	Cont. R-Value	Prop. U-Factor	Req. U-Factor	Prop. UA	Req. UA
Ceiling: Structural Insulated Panels (SIPs)	324		27.3	0.038	0.030	12	10
Elevation 4 - Left Side: Structural Insulated Panels Orientation: Back	168		23.5	0.046	0.084	6	11
3x6 Window A (W1): Vinyl Frame SHGC: 0.23 Orientation: Back	18			0.290	0.400	5	7
3x6 Window B (W1): Vinyl Frame SHGC: 0.23 Orientation: Back	18			0.290	0.400	5	7
Elevation 3 - Back Side: Structural Insulated Panels Orientation: Right side	180		23.5	0.046	0.084	7	13
Rear Door (D3): Solid Door (under 50% glazing) Orientation: Right side	24			0.170	0.400	4	10
Elevation 2 - Right Side: Structural Insulated Panels Orientation: Front	186		23.5	0.046	0.084	8	14
3x4 Window (W2): Vinyl Frame SHGC: 0.25 Orientation: Front	12			0.260	0.400	3	5
2x3 Window (W3): Vinyl Frame SHGC: 0.25 Orientation: Front	6			0.260	0.400	2	2
Elevation 1 - Front Side: Structural Insulated Panels Orientation: Left side	162		23.5	0.046	0.084	6	10
Entry Door (D1): Solid Door (under 50% glazing) Orientation: Left side	24			0.170	0.400	4	10
3x6 Window C (W1): Vinyl Frame SHGC: 0.23 Orientation: Left side	18			0.290	0.400	5	7
Floor: Structural Insulated Panels	308		27.6	0.034	0.064	10	20
Voids: Structural Insulated Panels	16		0.0	0.326	0.064	5	1

Compliance Statement: The proposed building design described here is consistent with the building plans, specifications, and other calculations submitted with the permit application. The proposed building has been designed to meet the 2018 IECC requirements in RES*check* Version : REScheck-Web and to comply with the mandatory requirements listed in the RES*check* Inspection Checklist.

JOSEPH A. DEFILIPPIS (A.O.R.) — Name - Title — Signature — 7/29/25 Date

Project Title: Boxabl - Arizona - Zone 2 - Cont. R Value — Report date: 07/29/25
Data filename: — Page 1 of 8

Generated by RES*check-Web* Software

Compliance Certificate

Project Boxabl - Arizona - Zone 5 - Cont. R Value

Energy Code:	**2018 IECC**
Location:	**Coconino County, Arizona**
Construction Type:	**Single-family**
Project Type:	**New Construction**
Project SubType:	**None**
Orientation:	**Bldg. faces 0 deg. from North**
Conditioned Floor Area:	**324 ft2**
Glazing Area	**10%**
Climate Zone:	**5 (6999 HDD)**
Permit Date:	
Permit Number:	
All Electric	**true**
Is Renewable	**false**
Has Charger	**false**
Has Battery:	**false**
Has Heat Pump:	**true**

Construction Site: Owner/Agent: Designer/Contractor:

Compliance: Passes using performance alternative

Compliance: **1.0% Better Than Code**

Slab-on-grade tradeoffs are no longer considered in the UA or performance compliance path in REScheck. Each slab-on-grade assembly in the specified climate zone must meet the minimum energy code insulation R-value and depth requirements.

Envelope Assemblies

[*] ADDED 4" BLOWN IN CELLULOSE INSULATION

Assembly	Gross Area or Perimeter	Cavity R-Value	Cont. R-Value	Prop. U-Factor	Req. U-Factor	Prop. UA	Req. UA
Ceiling: Structural Insulated Panels (SIPs)	324		41.5	0.025 *	0.026	8	8
Elev 4 - Left Side: Structural Insulated Panels Orientation: Front	168		23.5	0.046	0.060	6	8
3x6 Window A: Vinyl Frame SHGC: 0.23 Orientation: Front	18			0.290	0.300	5	5
3x6 Window B: Vinyl Frame SHGC: 0.23 Orientation: Front	18			0.290	0.300	5	5
Elev 3 - Back Side: Structural Insulated Panels Orientation: Left side	180		23.5	0.046	0.060	7	9
Rear Door: Solid Door (under 50% glazing) Orientation: Left side	24			0.170	0.300	4	7
Elev 2 - Right Side: Structural Insulated Panels Orientation: Back	186		23.5	0.046	0.060	8	10
3x4 Window: Vinyl Frame SHGC: 0.25 Orientation: Back	12			0.260	0.300	3	4
2x3 Window: Vinyl Frame SHGC: 0.25 Orientation: Back	6			0.260	0.300	2	2
Elev 1 - Front Side: Structural Insulated Panels Orientation: Right side	162		23.5	0.046	0.060	6	7
Entry Door: Solid Door (under 50% glazing) Orientation: Right side	24			0.170	0.300	4	7
3x6 Window C: Vinyl Frame SHGC: 0.23 Orientation: Right side	18			0.290	0.300	5	5
Floor: Structural Insulated Panels	308		27.6	0.034	0.033	10	10
Voids: Structural Insulated Panels	16		0.0	0.326	0.033	5	1

Compliance Statement: The proposed building design described here is consistent with the building plans, specifications, and other calculations submitted with the permit application. The proposed building has been designed to meet the 2018 IECC requirements in RES*check* Version : REScheck-Web and to comply with the mandatory requirements listed in the RES*check* Inspection Checklist.

JOSEPH A. DEFILIPPIS (A.O.R.) — Name - Title — Signature — 7/29/25 Date

Project Title: Boxabl - Arizona - Zone 5 - Cont. R Value — Report date: 07/29/25
Data filename: — Page 1 of 8

ENERGY CALCULATIONS

THESE VALUES WERE USED TO CREATE THE RESCHECK COMPLIANCE CERTIFICATE

NOTE:
AIR FILM VALUES SOURCED FROM THE 2021 ASHRAE FUNDAMENTALS, CHAPTER 26, PAGE 26.21, TABLE 10

WALL ASSEMBLY
OUTSIDE AIR FILM: 0.25
5.75" EPS WALL PANEL: 22.54 (ASSUMES R VALUE OF 3.92/INCH) VARIES ANYWHERE FROM 3.5 TO 4.0
1/4" MGO BOARD: 0
INSIDE AIR FILM: 0.68
- **TOTAL FOR WALL ASSEMBLY: R= 23.47 U= 0.0426**

FLOOR ASSEMBLY
OUTSIDE AIR FILM: 0.25
6.75" EPS WALL PANEL: 26.46 (ASSUMES R VALUE OF 3.92/INCH) VARIES ANYWHERE FROM 3.5 TO 4.0
1/4" MGO BOARD: 0
INSIDE AIR FILM: 0.92
- **TOTAL FOR FLOOR ASSEMBLY: R= 27.63 U= 0.0362**

ROOF ASSEMBLY
OUTSIDE AIR FILM: 0.25
6.75" EPS WALL PANEL: 26.46 (ASSUMES R VALUE OF 3.92/INCH) VARIES ANYWHERE FROM 3.5 TO 4.0
1/4" MGO BOARD: 0
INSIDE AIR FILM: 0.61
- **TOTAL FOR ROOF ASSEMBLY: R= 27.32 U= 0.0366**

ROOF ASSEMBLY (CLIMATE ZONES 5 OR HIGHER)
BLOWN IN CELLULOSE INSULATION: R = 14.4
6.75" EPS WALL PANEL: 26.46 (ASSUMES R VALUE OF 3.92/INCH) VARIES ANYWHERE FROM 3.5 TO 4.0
1/4" MGO BOARD: 0
INSIDE AIR FILM: 0.61
- **TOTAL FOR ROOF ASSEMBLY: R= 41.47 U= 0.0241**

NOTES

- CLIMATE ZONE 5 OR HIGHER: ADD 4" BLOWN IN CELLULOSE INSULATION (R = 14.4) OR OTHER INSULATION OF EQUAL R VALUE
- ENVELOPE CALCULATIONS WERE DONE USING THE PERFORMANCE METHOD
- BASED ON OUR RESCHECK ANALYSIS, THE LOSS OF THERMAL EFFICIENCY DUE TO INTERNAL CHASES, AND OTHER VOIDS WERE NEGLIGIBLE, AND DID NOT HAVE A NEGATIVE EFFECT ON THE OVERALL THERMAL PERFORMANCE OF THE UNIT.
- R VALUES NOTED ABOVE (R 3.92/IN) ARE REFERENCED IN ICC EVALUATION REPORT ESR 1962, FOR EXPANDED POLYSTYRENE INSULATION. THIS INSULATION IS LISTED AS THE INSULATION USED IN THE ICC ES EVALUATION REPORT ESR 4725 FOR STRUCTURAL INSULATION PANELS.

STATE OF ARIZONA
REFER TO SHEET #1
Apr 03 2026
Review of this document does not authorize or approve any omission or deviation from the applicable standards
F9080-10

REGISTERED ARCHITECT CERTIFICATE NO. 34195 JOSEPH A. DEFILIPPIS DATE SIGNED 2/11/26 ARIZONA, U.S.A.
Exp. 9/30/26

DATE:	REV:	DESCRIPTION:

PROFESSIONAL SEAL:
I HEREBY CERTIFY THAT THESE DRAWINGS HAVE BEEN PREPARED UNDER MY DIRECT SUPERVISION AND THAT TO THE BEST OF MY KNOWLEDGE AND BELIEF COMPLY WITH THE CODES AND ORDIANCES FOR PREFABRICATED DWELLING UNITS.

sevan
DESIGN SOLUTIONS, P.C.
Corporate Office:
3025 Highland Parkway | Suite 850
Downers Grove, IL 60515
Contact Information:
info@sevansolutions.com
www.sevansolutions.com
INTEGRITY | RESPECT | TEAMWORK | EXCELLENCE | CHARITY

SHEET MANAGEMENT	
SHEET FORMAT:	ARCH C
SHEET SCALE:	1:3
CREATED BY:	KD
RELEASE DATE:	12/10/2025
SHEET:	G2.0

MODEL: BXB-000009
2 DOOR CASITA
(ARIZONA)

ROOF TYPE: FOAM WEDGE ROOF

BOXABL INC.
5345 EAST NORTH BELT ROAD
NORTH LAS VEGAS, NV 89115, USA
+1(702) 500-9000 HELLO@BOXABL.COM

PROPRIETARY AND CONFIDENTIAL
THE INFORMATION CONTAINED IN THIS DRAWING IS THE SOLE PROPERTY OF BOXABL INC. ANY REPRODUCTION IN PART OR AS A WHOLE WITHOUT THE WRITTEN PERMISSION OF BOXABL INC. IS PROHIBITED.

BOXABL

RES*check* Software Version : REScheck-Web

Inspection Checklist

Energy Code: 2018 IECC

Requirements: 0.0% were addressed directly in the RES*check* software

Text in the "Comments/Assumptions" column is provided by the user in the REScheck Requirements screen. For each requirement, the user certifies that a code requirement will be met and how that is documented, or that an exception is being claimed. Where compliance is itemized in a separate table, a reference to that table is provided.

Section # & Req.ID	Pre-Inspection/Plan Review	Plans Verified Value	Field Verified Value	Complies?	Comments/Assumptions
103.1, 103.2 [PR1][1]	Construction drawings and documentation demonstrate energy code compliance for the building envelope. Thermal envelope represented on construction documents.			☐Complies ☐Does Not ☐Not Observable ☐Not Applicable	
103.1, 103.2, 403.7 [PR3][1]	Construction drawings and documentation demonstrate energy code compliance for lighting and mechanical systems. Systems serving multiple dwelling units must demonstrate compliance with the IECC Commercial Provisions.			☐Complies ☐Does Not ☐Not Observable ☐Not Applicable	
302.1, 403.7 [PR2][2]	Heating and cooling equipment is sized per ACCA Manual S based on loads calculated per ACCA Manual J or other methods approved by the code official.	Heating: Btu/hr____ Cooling: Btu/hr____	Heating: Btu/hr____ Cooling: Btu/hr____	☐Complies ☐Does Not ☐Not Observable ☐Not Applicable	

Additional Comments/Assumptions:

Section # & Req.ID	Framing / Rough-In Inspection	Plans Verified Value	Field Verified Value	Complies?	Comments/Assumptions
402.1.1, 402.3.4 [FR1][1]	Door U-factor.	U-____	U-____	☐Complies ☐Does Not ☐Not Observable ☐Not Applicable	*See the Envelope Assemblies table for values.*
402.1.1, 402.3.1, 402.3.3, 402.5 [FR2][1]	Glazing U-factor (area-weighted average).	U-____	U-____	☐Complies ☐Does Not ☐Not Observable ☐Not Applicable	*See the Envelope Assemblies table for values.*
303.1.3 [FR4][1]	U-factors of fenestration products are determined in accordance with the NFRC test procedure or taken from the default table.			☐Complies ☐Does Not ☐Not Observable ☐Not Applicable	
402.4.1.1 [FR23][1]	Air barrier and thermal barrier installed per manufacturer's instructions.			☐Complies ☐Does Not ☐Not Observable ☐Not Applicable	
402.4.3 [FR20][1]	Fenestration that is not site built is listed and labeled as meeting AAMA /WDMA/CSA 101/I.S.2/A440 or has infiltration rates per NFRC 400 that do not exceed code limits.			☐Complies ☐Does Not ☐Not Observable ☐Not Applicable	
402.4.5 [FR16][2]	IC-rated recessed lighting fixtures sealed at housing/interior finish and labeled to indicate ≤2.0 cfm leakage at 75 Pa.			☐Complies ☐Does Not ☐Not Observable ☐Not Applicable	
405.2 [FR25][1]	All ducts in unconditioned spaces or outside the building envelope are insulated to ≥R-6.	R-____	R-____	☐Complies ☐Does Not ☐Not Observable ☐Not Applicable	
403.3.5 [FR15][3]	Building cavities are not used as ducts or plenums.			☐Complies ☐Does Not ☐Not Observable ☐Not Applicable	
403.4 [FR17][2]	HVAC piping conveying fluids above 105 ºF or chilled fluids below 55 ºF are insulated to ≥R-3.	R-____	R-____	☐Complies ☐Does Not ☐Not Observable ☐Not Applicable	
403.4.1 [FR24][1]	Protection of insulation on HVAC piping.			☐Complies ☐Does Not ☐Not Observable ☐Not Applicable	
403.6 [FR19][2]	Automatic or gravity dampers are installed on all outdoor air intakes and exhausts.			☐Complies ☐Does Not ☐Not Observable ☐Not Applicable	

Additional Comments/Assumptions:

1	High Impact (Tier 1)	2	Medium Impact (Tier 2)	3	Low Impact (Tier 3)

Section # & Req.ID	Final Inspection Provisions	Plans Verified Value	Field Verified Value	Complies?	Comments/Assumptions
402.1.1, 402.2.1, 402.2.2, 402.2.6 [FI1][1]	Ceiling insulation R-value.	R-____ ☐ Wood ☐ Steel	R-____ ☐ Wood ☐ Steel	☐Complies ☐Does Not ☐Not Observable ☐Not Applicable	*See the Envelope Assemblies table for values.*
303.1.1.1, 303.2 [FI2][1]	Ceiling insulation installed per manufacturer's instructions. Blown insulation marked every 300 ft².			☐Complies ☐Does Not ☐Not Observable ☐Not Applicable	
402.2.3 [FI22][2]	Vented attics with air permeable insulation include baffle adjacent to soffit and eave vents that extends over insulation.			☐Complies ☐Does Not ☐Not Observable ☐Not Applicable	
402.4.1.2 [FI17][1]	Blower door test @ 50 Pa. <=5 ach in Climate Zones 1-2, and <=3 ach in Climate Zones 3-8.	ACH 50 =____	ACH 50 =____	☐Complies ☐Does Not ☐Not Observable ☐Not Applicable	
403.3.3 [FI27][1]	Ducts are pressure tested to determine air leakage with either: Rough-in test: Total leakage measured with a pressure differential of 0.1 inch w.g. across the system including the manufacturer's air handler enclosure if installed at time of test. Postconstruction test: Total leakage measured with a pressure differential of 0.1 inch w.g. across the entire system including the manufacturer's air handler enclosure.	____ cfm/100 ft²	____ cfm/100 ft²	☐Complies ☐Does Not ☐Not Observable ☐Not Applicable	
403.3.4 [FI4][1]	Duct tightness test result of <=4 cfm/100 ft2 across the system or <=3 cfm/100 ft2 without air handler @ 25 Pa. For rough-in tests, verification may need to occur during Framing Inspection.	____ cfm/100 ft²	____ cfm/100 ft²	☐Complies ☐Does Not ☐Not Observable ☐Not Applicable	
403.3.2.1 [FI24][1]	Air handler leakage designated by manufacturer at <=2% of design air flow.			☐Complies ☐Does Not ☐Not Observable ☐Not Applicable	
403.1.1 [FI9][2]	Programmable thermostats installed for control of primary heating and cooling systems and initially set by manufacturer to code specifications.			☐Complies ☐Does Not ☐Not Observable ☐Not Applicable	
403.1.2 [FI10][2]	Heat pump thermostat installed on heat pumps.			☐Complies ☐Does Not ☐Not Observable ☐Not Applicable	
403.5.1 [FI11][2]	Circulating service hot water systems have automatic or accessible manual controls.			☐Complies ☐Does Not ☐Not Observable ☐Not Applicable	
403.6.1 [FI25][2]	All mechanical ventilation system fans not part of tested and listed HVAC equipment meet efficacy and air flow limits per Table R403.6.1.			☐Complies ☐Does Not ☐Not Observable ☐Not Applicable	

1	High Impact (Tier 1)	2	Medium Impact (Tier 2)	3	Low Impact (Tier 3)

Section # & Req.ID	Insulation Inspection	Plans Verified Value	Field Verified Value	Complies?	Comments/Assumptions
303.1 [IN13][2]	All installed insulation is labeled or the installed R-values provided.			☐Complies ☐Does Not ☐Not Observable ☐Not Applicable	
402.1.1, 402.2.6 [IN1][1]	Floor insulation R-value.	R-____ ☐ Wood ☐ Steel	R-____ ☐ Wood ☐ Steel	☐Complies ☐Does Not ☐Not Observable ☐Not Applicable	*See the Envelope Assemblies table for values.*
303.2, 402.2.8 [IN2][1]	Floor insulation installed per manufacturer's instructions and in substantial contact with the underside of the subfloor, or floor framing cavity insulation is in contact with the top side of sheathing, or continuous insulation is installed on the underside of floor framing and extends from the bottom to the top of all perimeter floor framing members.			☐Complies ☐Does Not ☐Not Observable ☐Not Applicable	
402.1.1, 402.2.5, 402.2.6 [IN3][1]	Wall insulation R-value. If this is a mass wall with at least ½ of the wall insulation on the wall exterior, the exterior insulation requirement applies (FR10).	R-____ ☐ Wood ☐ Mass ☐ Steel	R-____ ☐ Wood ☐ Mass ☐ Steel	☐Complies ☐Does Not ☐Not Observable ☐Not Applicable	*See the Envelope Assemblies table for values.*
303.2 [IN4][1]	Wall insulation is installed per manufacturer's instructions.			☐Complies ☐Does Not ☐Not Observable ☐Not Applicable	

Additional Comments/Assumptions:

Section # & Req.ID	Final Inspection Provisions	Plans Verified Value	Field Verified Value	Complies?	Comments/Assumptions
403.2 [FI26][2]	Hot water boilers supplying heat through one- or two-pipe heating systems have outdoor setback control to lower boiler water temperature based on outdoor temperature.			☐Complies ☐Does Not ☐Not Observable ☐Not Applicable	
403.5.1.1 [FI28][2]	Heated water circulation systems have a circulation pump. The system return pipe is a dedicated return pipe or a cold water supply pipe. Gravity and thermos-syphon circulation systems are not present. Controls for circulating hot water system pumps start the pump with signal for hot water demand within the occupancy. Controls automatically turn off the pump when water is in circulation loop is at set-point temperature and no demand for hot water exists.			☐Complies ☐Does Not ☐Not Observable ☐Not Applicable	
403.5.1.2 [FI29][2]	Electric heat trace systems comply with IEEE 515.1 or UL 515. Controls automatically adjust the energy input to the heat tracing to maintain the desired water temperature in the piping.			☐Complies ☐Does Not ☐Not Observable ☐Not Applicable	
403.5.2 [FI30][2]	Demand recirculation water systems have controls that manage operation of the pump and limit the temperature of the water entering the cold water piping to <= 104ºF.			☐Complies ☐Does Not ☐Not Observable ☐Not Applicable	
403.5.4 [FI31][2]	Drain water heat recovery units tested in accordance with CSA B55.1. Potable water-side pressure loss of drain water heat recovery units < 3 psi for individual units connected to one or two showers. Potable water-side pressure loss of drain water heat recovery units < 2 psi for individual units connected to three or more showers.			☐Complies ☐Does Not ☐Not Observable ☐Not Applicable	
404.1 [FI6][1]	90% or more of permanent fixtures have high efficacy lamps.			☐Complies ☐Does Not ☐Not Observable ☐Not Applicable	
404.1.1 [FI23][3]	Fuel gas lighting systems have no continuous pilot light.			☐Complies ☐Does Not ☐Not Observable ☐Not Applicable	
401.3 [FI7][2]	Compliance certificate posted.			☐Complies ☐Does Not ☐Not Observable ☐Not Applicable	
303.3 [FI18][3]	Manufacturer manuals for mechanical and water heating systems have been provided.			☐Complies ☐Does Not ☐Not Observable ☐Not Applicable	

Additional Comments/Assumptions:

1	High Impact (Tier 1)	2	Medium Impact (Tier 2)	3	Low Impact (Tier 3)

Section # & Req.ID	Foundation Inspection	Complies?	Comments/Assumptions
303.2.1 [FO11][2]	A protective covering is installed to protect exposed exterior insulation and extends a minimum of 6 in. below grade.	☐Complies ☐Does Not ☐Not Observable ☐Not Applicable	
403.9 [FO12][2]	Snow- and ice-melting system controls installed.	☐Complies ☐Does Not ☐Not Observable ☐Not Applicable	

Additional Comments/Assumptions:

STATE OF ARIZONA
REFER TO SHEET #1

Apr 03 2026

Review of this document does not authorize or approve any omission or deviation from the applicable standards

F9080-10

REGISTERED ARCHITECT CERTIFICATE NO. 34195 JOSEPH A. DEFILIPPIS DATE SIGNED 3/11/26 ARIZONA, U.S.A.
Exp. 9/30/26

DATE:	REV:	DESCRIPTION:

PROFESSIONAL SEAL:

I HEREBY CERTIFY THAT THESE DRAWINGS HAVE BEEN PREPARED UNDER MY DIRECT SUPERVISION AND THAT TO THE BEST OF MY KNOWLEDGE AND BELIEF COMPLY WITH THE CODES AND ORDIANCES FOR PREFABRICATED DWELLING UNITS.

sevan
DESIGN SOLUTIONS, P.C.

Corporate Office:
3025 Highland Parkway | Suite 850
Downers Grove, IL 60515

Contact Information:
info@sevansolutions.com
www.sevansolutions.com

INTEGRITY | RESPECT | TEAMWORK | EXCELLENCE | CHARITY

SHEET MANAGEMENT	
SHEET FORMAT:	ARCH C
SHEET SCALE:	1:3
CREATED BY:	KD
RELEASE DATE:	12/10/2025

SHEET: G2.1

MODEL: BXB-000009 2 DOOR CASITA (ARIZONA)

ROOF TYPE: FOAM WEDGE ROOF

BOXABL INC.
5345 EAST NORTH BELT ROAD
NORTH LAS VEGAS, NV 89115, USA
+1(702) 500-9000 HELLO@BOXABL.COM

PROPRIETARY AND CONFIDENTIAL
THE INFORMATION CONTAINED IN THIS DRAWING IS THE SOLE PROPERTY OF BOXABL INC. ANY REPRODUCTION IN PART OR AS A WHOLE WITHOUT THE WRITTEN PERMISSION OF BOXABL INC. IS PROHIBITED.

BOXABL

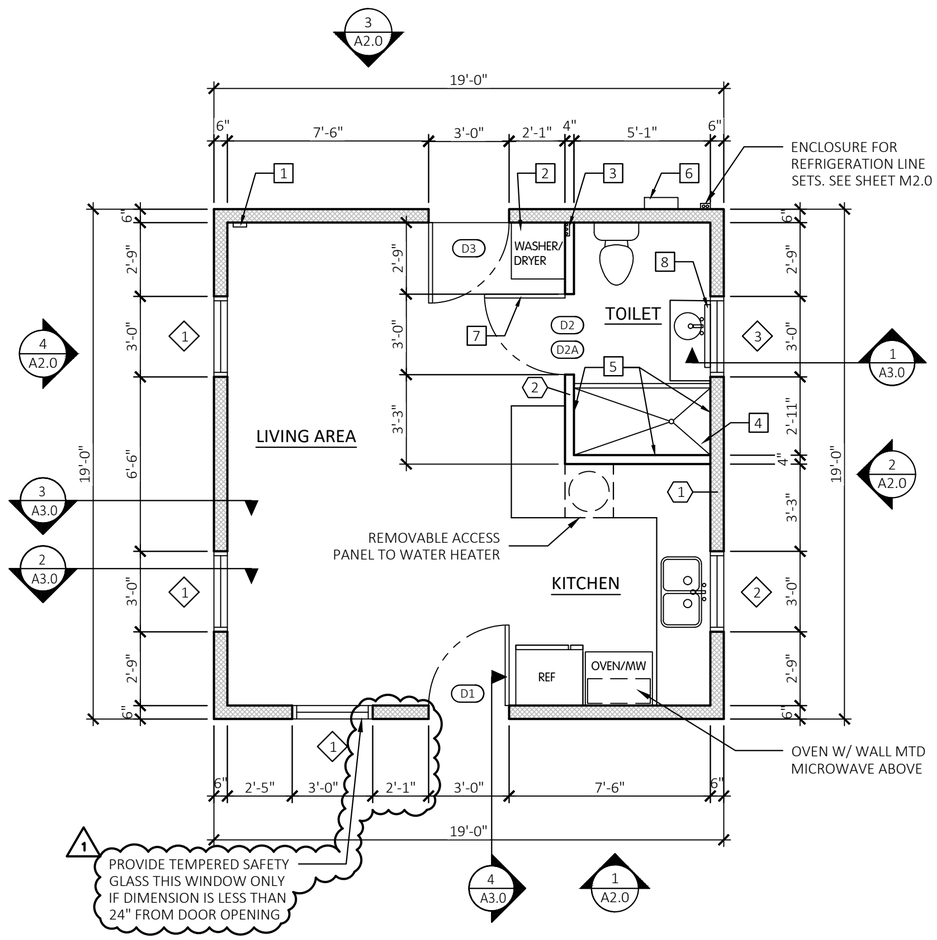

1 A1.0 FLOOR PLAN
SCALE: 1/4" = 1'-0"

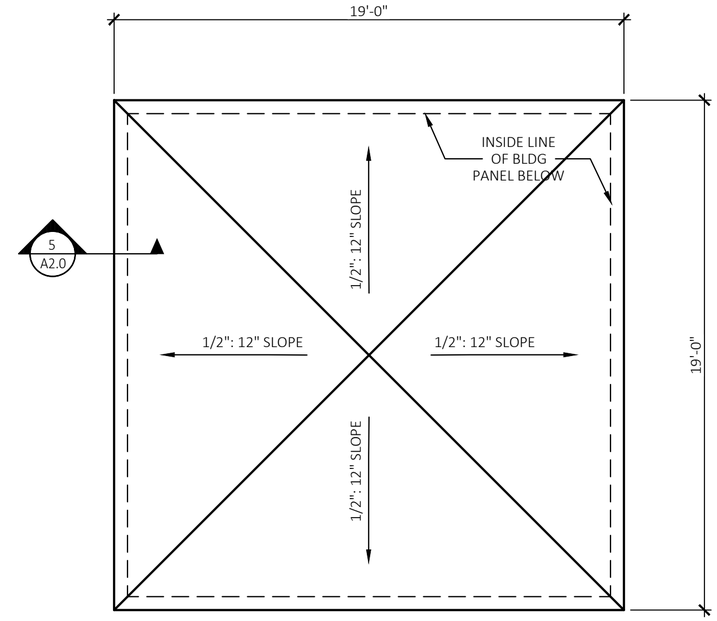

FOAM WEDGE ROOF (1/2:12 SLOPE):
1" TH @ ROOF EDGES; 5-3/4" TH @ CENTER

FURNISHED + INSTALLED ON SITE BY SITE INSTALLER AS PART OF SITE INSTALLATION WORK

2 A1.0 ROOF PLAN
SCALE: 1/4" = 1'-0"

LEGEND

- KEY NOTE
- SIP PANEL
- INTERIOR WALL
- WINDOW TAG SEE A1.0 + A1.1
- DOOR TAG SEE A1.0 + A1.1

NOTES

- SEE MANUFACTURER'S DRAWINGS FOR UTILITY CONNECTIONS, PANEL DETAILS, MODULAR CONNECTIONS & ALL RELATED STRUCTURAL DETAILS
- FINAL DIMENSIONS ARE WITHIN ± 1" OF DIMENSIONS SHOWN BASED ON MANUFACTURING TOLERANCES

FLOOR PLAN KEYNOTES

1	WALL MOUNTED SMOKE DETECTOR 20' AWAY FROM COOKING APPLIANCE
2	VENTLESS COMBO WASHER/DRYER UNIT
3	WASHER OUTLET BOX. RUN HOSES THRU INTERIOR PARTITIONS TO CONNECT TO WASHER/DRYER UNIT
4	30" x 60" SHOWER WITH 2" CURB. SEE SHEET P2.0 + P3.0 FOR SHOWER; SHEET P2.1 +P3.1 FOR BATHTUB
5	BATHTUB AND/OR SHOWER FLOORS OR WALLS SHALL BE FINISHED WITH A NON-ABSORBENT SURFACE 6'-0" A.F.F.
6	INSIGNIA TO BE PLACED DIRECTLY BELOW THE ELECTRICAL PANEL ON THE EXTERIOR WALL AND SECURED WITH RIVETS DIRECTLY TO THE STEEL CLADDING.
7	INTERIOR DOOR TO BE INSTALLED IN ACCORDANCE W/ BOXABL'S INSTALLATION INSTRUCTIONS
8	LED MIRROR WITH TEMPERED GLASS (FIN-000016)

NOTE:
REFER TO A1.1 FOR WINDOW & DOOR SCHEDULE, THE LIGHT & VENTILATION SCHEDULES AND FINISHES

STATE OF ARIZONA
REFER TO SHEET #1

Apr 03 2026

Review of this document does not authorize or approve any omission or deviation from the applicable standards

F9080-10

REGISTERED ARCHITECT CERTIFICATE NO. 34195 JOSEPH A. DEFILIPPIS DATE SIGNED 3-12-26 ARIZONA, U.S.A.
Exp. 9-30-26

DATE:	REV:	DESCRIPTION:
03-13-25	1	PLAN REVIEW COMMENTS

PROFESSIONAL SEAL:
I HEREBY CERTIFY THAT THESE DRAWINGS HAVE BEEN PREPARED UNDER MY DIRECT SUPERVISION AND THAT TO THE BEST OF MY KNOWLEDGE AND BELIEF COMPLY WITH THE CODES AND ORDIANCES FOR PREFABRICATED DWELLING UNITS.

sevan
DESIGN SOLUTIONS, P.C.
Corporate Office:
3025 Highland Parkway | Suite 850
Downers Grove, IL 60515
Contact Information:
info@sevansolutions.com
www.sevansolutions.com
INTEGRITY | RESPECT | TEAMWORK | EXCELLENCE | CHARITY

SHEET MANAGEMENT	
SHEET FORMAT:	ARCH C
SHEET SCALE:	1:3
CREATED BY:	KD
RELEASE DATE:	12/10/2025

SHEET: A1.0

MODEL: BXB-000009 2 DOOR CASITA (ARIZONA)

ROOF TYPE: FOAM WEDGE ROOF

BOXABL INC.
5345 EAST NORTH BELT ROAD
NORTH LAS VEGAS, NV 89115, USA
+1(702) 500-9000 HELLO@BOXABL.COM

PROPRIETARY AND CONFIDENTIAL
THE INFORMATION CONTAINED IN THIS DRAWING IS THE SOLE PROPERTY OF BOXABL INC. ANY REPRODUCTION IN PART OR AS A WHOLE WITHOUT THE WRITTEN PERMISSION OF BOXABL INC. IS PROHIBITED.

BOXABL

FINISH SCHEDULE

APPLICATIONS	COLOR	FINISH	MANUFACTURER	NOTES
WALLS/CEILINGS	SHERWIN WILLIAMS 7006 EXTRA WHITE	EGG SHELL	SHERWIN WILLIAMS	
FLOORING	#BE011	N/A	MOHAWK	
INTERIOR WINDOW/DOOR TRIM	SHERWIN WILLIAMS 7006 EXTRA WHITE	UV-RESISTANT SATIN	BOXABL	
INTERIOR BASEBOARD	SHERWIN WILLIAMS 7006 EXTRA WHITE	UV-RESISTANT SATIN	BOXABL	
CABINETS	SHERWIN WILLIAMS 7006 EXTRA WHITE	SATIN	BOXABL	CABINETRY
COUNTERTOPS	#9527-58	N/A	FORMICA	COUNTERTOP LAMINATE

HARDWARE SCHEDULE

NUMBER	PRODUCT TYPE	MANUFACTURER	MODEL NO	MATERIAL	COLOR	NOTES
H1	EXTERIOR DOOR HANDLE AND DEADBOLT SET	BOXABL	GDQ22-CA0411	ZINC ALLOY	BLACK	COMBO KNOB, LEVER HANDLE, DEADBOLT
H2	INTERIOR DOOR HANDLE AND DEADBOLT SET	BOXABL	50843 BL	ZINC ALLOY	BLACK	
H3	INTERIOR DOOR HINGES	BOXABL	16-8942	ZINC ALLOY	BLACK	3.5 IN HEIGHT

NATURAL LIGHT SCHEDULE (8% REQUIRED)

BASED OFF 2018 IRC, SECTION R303.1 (1)

ROOM	TOTAL SQ. FT.	NATURAL LIGHT PROVIDED	NATURAL LIGHT REQUIRED	ACTUAL PERCENTAGE
LIVING AREA	208 SF	54 SF	16.64 SF	26%
KITCHEN	66 SF	12 SF	5.28 SF	18%
TOILET	44 SF	6 SF *	1.32 SF	13%

NATURAL VENTILATION SCHEDULE (4% REQUIRED)

BASED OFF 2018 IRC, SECTION R303.1
LIVING ROOM & KITCHEN CONSIDERED AN ADJOINING SPACE (1)

ROOM	TOTAL SQ. FT.	WINDOW VENT SQ. FT. PROVIDED	VENTILATION REQUIRED	ACTUAL PERCENTAGE
LIVING AREA	274 SF	27 SF	11 SF	9.9%
KITCHEN				
TOILET	44 SF	0 SF *	MECH. VENTED 70 CFM	N/A

* ARTIFICIAL LIGHT AND VENTILATION PROVIDED PER EXCEPTION OF IRC SECTION R303.3

WINDOW & DOOR SCHEDULE

NUMBER	PRODUCT	CONFIGURATION	SIZE	MATERIAL	U-FACTOR	SOLAR HEAT GAIN (SHGC)	DPI	MANUFACTURER	MANUFACTURER PART NUMBER	BOXABL PART NUMBER	NOTES
1	WINDOW	SINGLE HUNG	3'-0" X 6'-0"	VINYL	0.29	0.23	+20/-20	JELD-WEN	BFFSH3672	WIN-000015	APPROVED OR EQUIVALENT. INCLUDES BUG SCREEN SHADING.
2	WINDOW	FIXED	3'-0" X 4'-0"	VINYL	0.26	0.25	+20/-20	JELD-WEN	BLVFW3648	WIN-000014	APPROVED OR EQUIVALENT. INCLUDES BUG SCREEN SHADING
3	WINDOW	FIXED	3'-0" X 2'-0"	VINYL	0.26	0.25	+20/-20	JELD-WEN	VFW3624	WIN-000013	APPROVED OR EQUIVALENT. INCLUDES BUG SCREEN SHADING
D1	DOOR	ENTRY DOOR	3'-0" X 8'-0"	FIBERGLASS	0.17	0	+55/-60	PLASTPRO	3/0C8/0 IMPACT SERIES	DOR-000005	APPROVED OR EQUIVALENT
D2	DOOR	STANDARD TOILET DOOR	3'-0" X 8'-0"	WOOD/GLASS	N/A	N/A	N/A	JHK	JHK-G01	DOR-000021	TEMPERED, FROSTED SAFETY GLASS
D2A	DOOR	OPTIONAL TOILET DOOR	3'-0" X 8'-0"	WOOD	N/A	N/A	N/A	JHK	LO1206147	DOR-000022	SOLID DOOR
D3	DOOR	REAR DOOR	3'-0 X 8'-0"	FIBERGLASS	0.17	0	+55/-60	PLASTPRO	3/0C8/0 IMPACT SERIES	DOR-000005	APPROVED OR EQUIVALENT

NOTE:
ALL WALL AND CEILING FINISHES SHALL HAVE A FLAME SPREAD INDEX OF NOT GREATER THAN 200.
THIS EXCLUDES FLAME SPREAD INDEX REQUIREMENTS FOR TRIM FOR PICTURE MOLDS, CHAIR RAILS, BASEBOARDS AND HANDRAILS (TO DOORS AND WINDOWS OR THEIR FRAMES) OR MATERIALS THAT ARE LESS THAN 1/28 INCH IN THICKNESS CEMENTED TO THE SURFACE OF WALLS OR CEILINGS IF THESE MATERIALS EXHIBIT FLAME SPREAD INDEX VALUES NOT GREATER THAN THOSE OF PAPER OF THIS THICKNESS CEMENTED TO A NONCUMBUSTIBLE BACKING

NOTE:
ALL WALL AND CEILING FINISHES SHALL HAVE A SMOKE-DEVELOPED INDEX OF NOT GREATER THAN 450

STATE OF ARIZONA
REFER TO SHEET #1

Apr 03 2026

Review of this document does not authorize or approve any omission or deviation from the applicable standards

F9080-10

REGISTERED ARCHITECT
CERTIFICATE NO. 34195
JOSEPH A. DEFILIPPIS
DATE SIGNED 3-12-26
ARIZONA, U.S.A.
Exp. 9-30-26

DATE:	REV:	DESCRIPTION:
03-13-25	1	PLAN REVIEW COMMENTS

PROFESSIONAL SEAL:

I HEREBY CERTIFY THAT THESE DRAWINGS HAVE BEEN PREPARED UNDER MY DIRECT SUPERVISION AND THAT TO THE BEST OF MY KNOWLEDGE AND BELIEF COMPLY WITH THE CODES AND ORDIANCES FOR PREFABRICATED DWELLING UNITS.

sevan
DESIGN SOLUTIONS, P.C.

Corporate Office:
3025 Highland Parkway | Suite 850
Downers Grove, IL 60515

Contact Information:
info@sevansolutions.com
www.sevansolutions.com

INTEGRITY | RESPECT | TEAMWORK | EXCELLENCE | CHARITY

SHEET MANAGEMENT	
SHEET FORMAT:	ARCH C
SHEET SCALE:	1:3
CREATED BY:	KD
RELEASE DATE:	12/10/2025

SHEET: A1.1

MODEL: BXB-000009
2 DOOR CASITA
(ARIZONA)

ROOF TYPE: FOAM WEDGE ROOF

BOXABL INC.
5345 EAST NORTH BELT ROAD
NORTH LAS VEGAS, NV 89115, USA
+1(702) 500-9000 HELLO@BOXABL.COM

PROPRIETARY AND CONFIDENTIAL
THE INFORMATION CONTAINED IN THIS DRAWING IS THE SOLE PROPERTY OF BOXABL INC. ANY REPRODUCTION IN PART OR AS A WHOLE WITHOUT THE WRITTEN PERMISSION OF BOXABL INC. IS PROHIBITED.

BOXABL

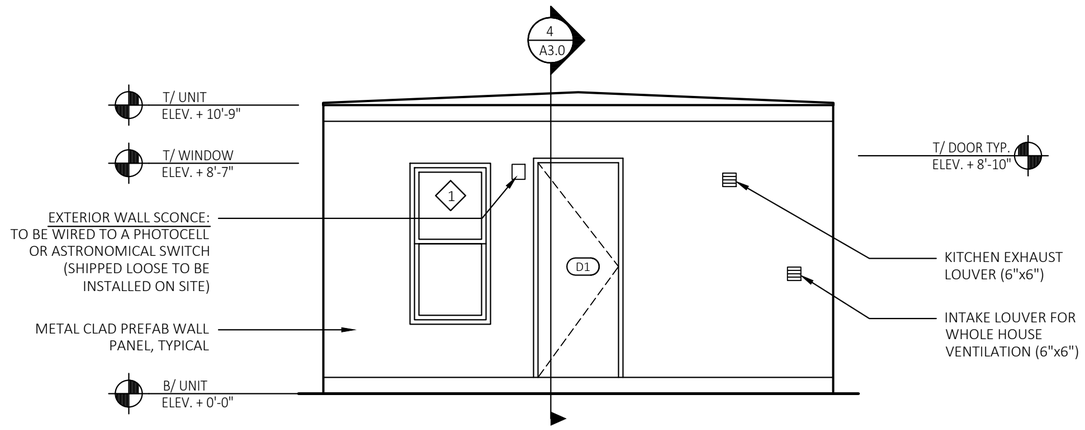

1 / A2.0 FRONT ELEVATION *OPENING PERCENTAGE = 20.56%*
SCALE: 1/4" = 1'-0"

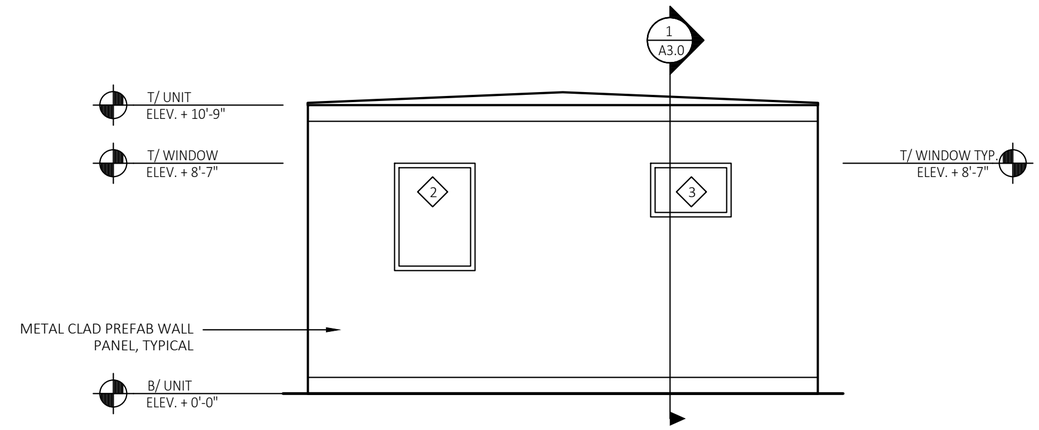

2 / A2.0 RIGHT ELEVATION *OPENING PERCENTAGE = 8.81%*
SCALE: 1/4" = 1'-0"

NOTE:
ALL INTAKES, GRILLES, + LOUVERS TO BE PROTECTED W/CORROSION RESISTANT SCREENS NOT LESS THAN 1/4" & NOT MORE THAN 1/2" IN SIZE (FACTORY INSTALLED)

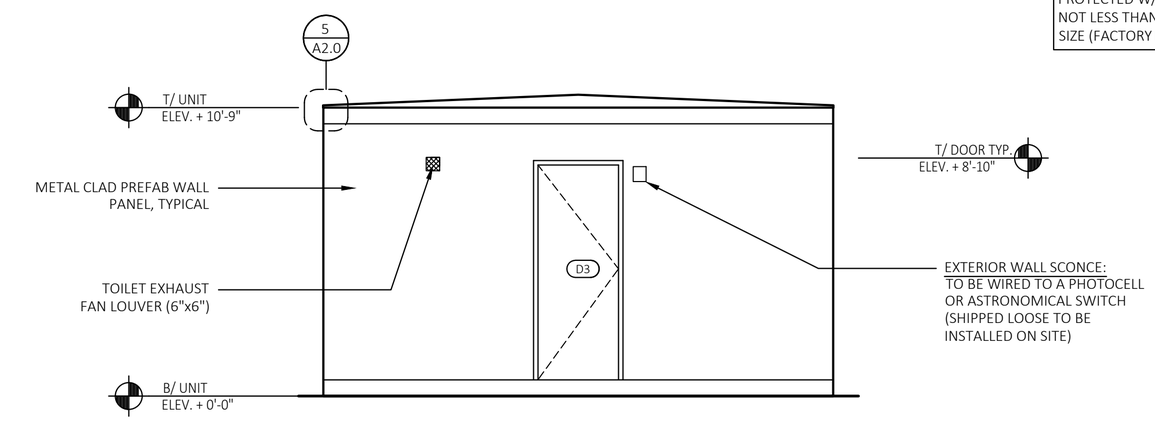

3 / A2.0 REAR ELEVATION *OPENING PERCENTAGE = 11.75%*
SCALE: 1/4" = 1'-0"

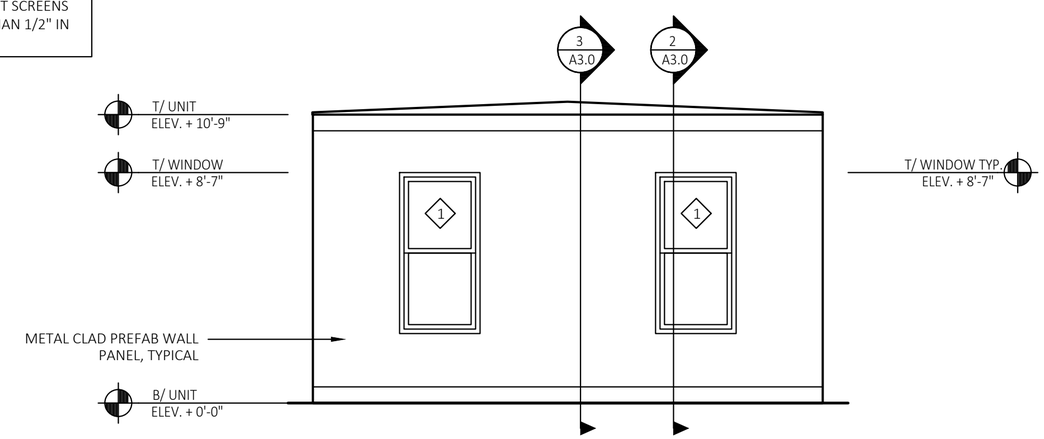

4 / A2.0 LEFT ELEVATION *OPENING PERCENTAGE = 17.62%*
SCALE: 1/4" = 1'-0"

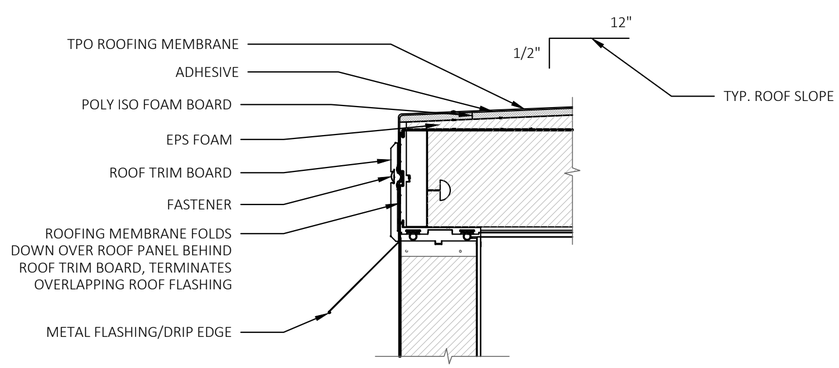

5 / A2.0 TYP. ROOF TERMINATION DETAIL AT FOAM WEDGE ROOF
SCALE: 1 1/2" = 1'-0"

NOTE:
THE INSTALLATION CONTRACTOR SHALL FIELD INSTALL WEATHER BARRIER TAPE (3M 8067) TO ALL PANEL SEAMS AS SUCH:

- HORIZONTAL WALL TO FLOOR SEAMS USE 4" TAPE.
- ROOF SEAMS PARALLEL TO STEEL ROOF BEAMS USE 2" TAPE.
- ROOF SEAMS PERPENDICULAR TO STEEL ROOF BEAM USE 4" TAPE.
- LOWER 4" HORIZONTAL TAPE IS CENTERED ALONG WALL TO FLOOR SEAM
- UPPER 4" HORIZONTAL TAPE IS PLACED 1/4" BELOW THE LOWER SHOULDER OF PVC EXTRUSION.
- SOME UNITS MAY HAVE FLASHING TAPE PRE-INSTALLED. IF NOT, TAPE SHOULD ALSO BE PLACED OVER THE PRE-INSTALLED CORE CONNECTION PLATES.
- REMOVE ALL PROTECTIVE FILM FROM WALLS PRIOR TO INSTALLING TAPE.
- WIPE DOWN ALL SEAMS. TAPE WILL BE APPLIED TO WITH ISOPROPYL ALCOHOL OR EQUIVALENT. *DO NOT USE ACETONE*
- START FROM THE BOTTOM AND WORK YOUR WAY UP, FLASHING TAPE SHOULD OVERLAP FROM BOTTOM TO TOP.
- TAPE SHOULD BE APPLIED AS A POSITIVE LAP OR A SHINGLED FASHION, SO THE HIGHER TAPE ALWAYS COVERS THE TAPE BELOW IT.
- ALL CORNERS SHOULD HAVE A 6" TAPE OVERLAP

STATE OF ARIZONA
REFER TO SHEET #1

Apr 03 2026

Review of this document does not authorize or approve any omission or deviation from the applicable standards

F9080-10

REGISTERED ARCHITECT
CERTIFICATE NO.
34195
JOSEPH A.
DEFILIPPIS
DATE SIGNED 2/11/26
ARIZONA, U.S.A.
Exp. 9/30/26

MAXIMUM AREA OF EXT. WALL OPENINGS AND FIRE SEPARATION DISTANCE / DEGREE OF OPENING PROTECTION

BASED OFF IRC TABLE R302.1 (1) EXT. WALLS

FIRE SEPARATION DISTANCE (FEET)	DEGREE OF OPENING PROTECTION	ALLOWABLE AREA
0 TO LESS THAN 3	UNPROTECTED, NONSPRINKLERED	NOT PERMITTED
3 TO LESS THAN 5	UNPROTECTED, NONSPRINKLERED	NOT PERMITTED
5 TO LESS THAN 10	UNPROTECTED, NONSPRINKLERED	10%
10 TO LESS THAN 15	UNPROTECTED, NONSPRINKLERED	15%
15 TO LESS THAN 20	UNPROTECTED, NONSPRINKLERED	25%

DATE:	REV:	DESCRIPTION:

PROFESSIONAL SEAL:

I HEREBY CERTIFY THAT THESE DRAWINGS HAVE BEEN PREPARED UNDER MY DIRECT SUPERVISION AND THAT TO THE BEST OF MY KNOWLEDGE AND BELIEF COMPLY WITH THE CODES AND ORDIANCES FOR PREFABRICATED DWELLING UNITS.

sevan
DESIGN SOLUTIONS, P.C.

Corporate Office:
3025 Highland Parkway | Suite 850
Downers Grove, IL 60515

Contact Information:
info@sevansolutions.com
www.sevansolutions.com

INTEGRITY | RESPECT | TEAMWORK | EXCELLENCE | CHARITY

SHEET MANAGEMENT	
SHEET FORMAT:	ARCH C
SHEET SCALE:	1:3
CREATED BY:	KD
RELEASE DATE:	12/10/2025

SHEET: A2.0

MODEL: BXB-000009
2 DOOR CASITA
(ARIZONA)

ROOF TYPE: FOAM WEDGE ROOF

BOXABL INC.
5345 EAST NORTH BELT ROAD
NORTH LAS VEGAS, NV 89115, USA
+1(702) 500-9000 HELLO@BOXABL.COM

PROPRIETARY AND CONFIDENTIAL
THE INFORMATION CONTAINED IN THIS DRAWING IS THE SOLE PROPERTY OF BOXABL INC. ANY REPRODUCTION IN PART OR AS A WHOLE WITHOUT THE WRITTEN PERMISSION OF BOXABL INC. IS PROHIBITED.

BOXABL

TYPICAL ROOF COVERING (LOW SLOPE ROOF):

GAF TPO FULLY ADHERED SINGLE PLY MEMBRANE OR APPROVED ADHERE EPDM ROOFING MEMBRANE WITH ALL REQUIRED FLASHINGS, AND ACCESSORIES AS NECESSARY FOR A COMPLETE AND WATERTIGHT INSTALLATION. BASE INSULATION: 1" TH @ ROOF EDGES, 5-3/4" TH @ CENTER (1/2: 12 SLOPE) (FOAM WEDGE ROOF)
ROOFS TO BE INSTALLED + INSPECTED ON SITE.

STANDARD WALL CONSTRUCTION TYPES

TYPICAL STRUCTURAL INSULATED WALL PANEL 1/4" MGO BOARD ADHERED TO 5 3/4" EPS FOAM INSULATION W/ 24 GAUGE METAL PANEL AS OUTSIDE FINISH.
TYPICAL STRUCTURAL INSULATED ROOF PANEL 1/4" MGO BOARD ADHERED TO 6 3/4" EPS FOAM INSULATION W/ TPO ROOFING MEMBRANE AS OUTSIDE FINISH
TYPICAL STRUCTURAL INSULATED FLOOR PANEL 1/4" MGO BOARD ADHERED TO 6 3/4" EPS FOAM INSULATION W/ 24 GAUGE METAL PANEL AS OUTSIDE FINISH.

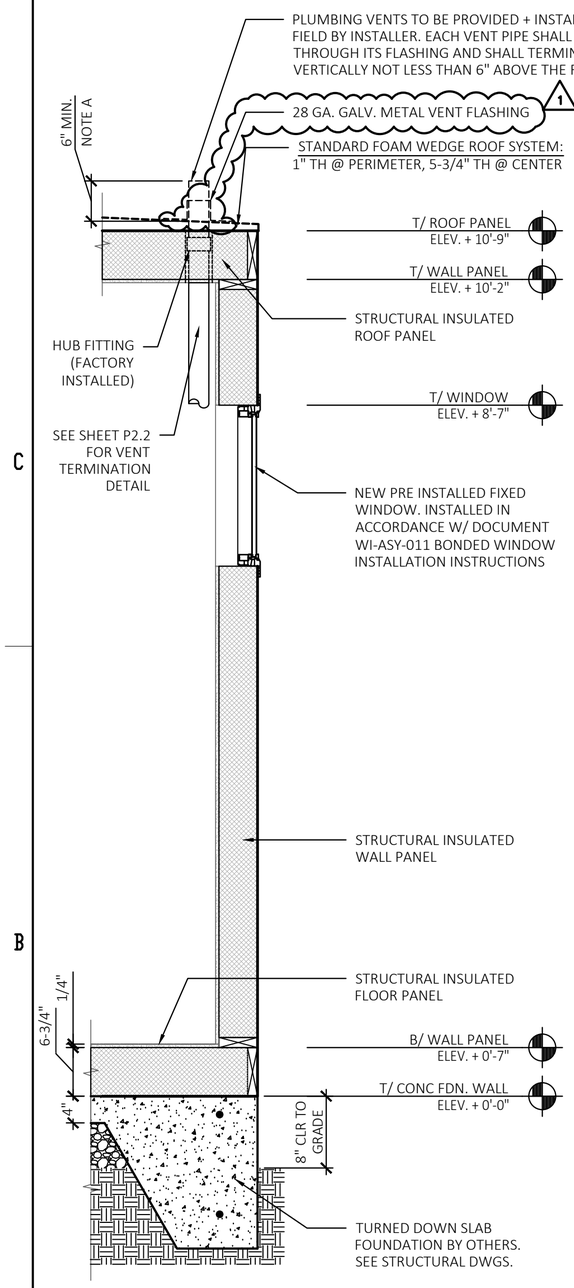

1 A3.0 WALL SECTION
SCALE: 3/4" = 1'-0"

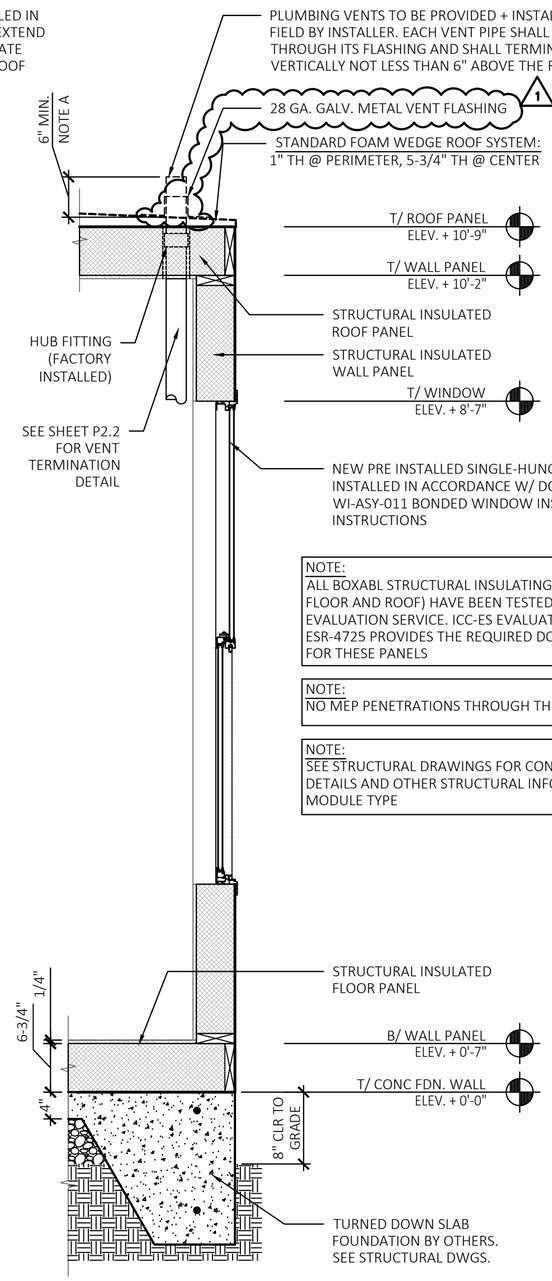

NOTE:
ALL BOXABL STRUCTURAL INSULATING PANELS (WALLS, FLOOR AND ROOF) HAVE BEEN TESTED BY THE ICC EVALUATION SERVICE. ICC-ES EVALUATION REPORT ESR-4725 PROVIDES THE REQUIRED DOCUMENTATION FOR THESE PANELS

NOTE:
NO MEP PENETRATIONS THROUGH THE FLOOR PANELS.

NOTE:
SEE STRUCTURAL DRAWINGS FOR CONNECTIONS, DETAILS AND OTHER STRUCTURAL INFO FOR EACH MODULE TYPE

2 A3.0 WALL SECTION
SCALE: 3/4" = 1'-0"

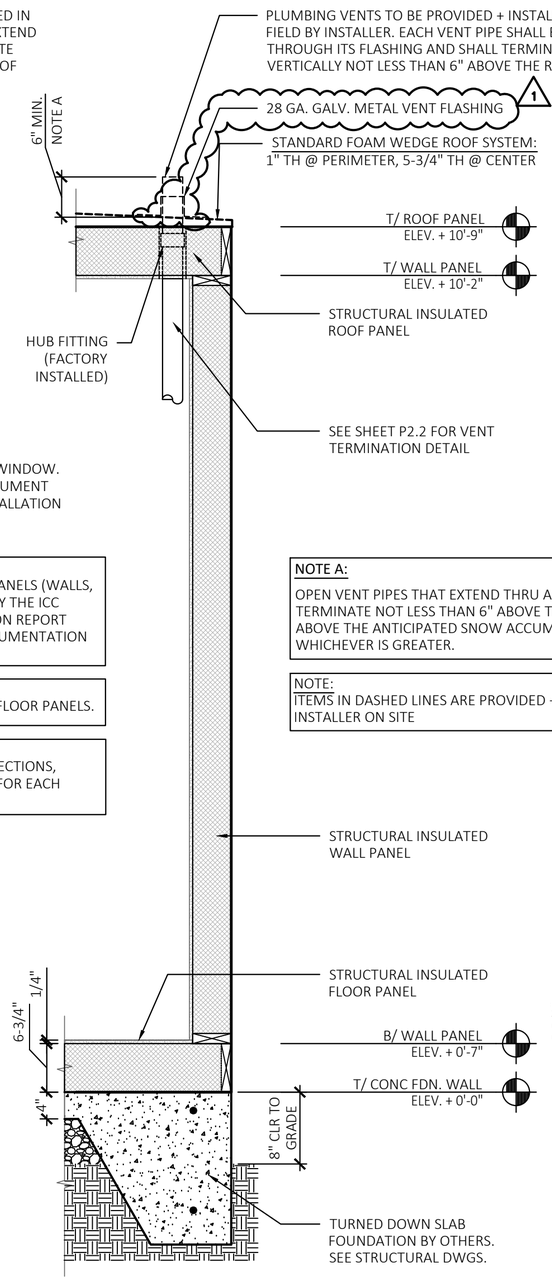

NOTE A:
OPEN VENT PIPES THAT EXTEND THRU A ROOF SHALL TERMINATE NOT LESS THAN 6" ABOVE THE ROOF OR 6" ABOVE THE ANTICIPATED SNOW ACCUMULATION, WHICHEVER IS GREATER.

NOTE:
ITEMS IN DASHED LINES ARE PROVIDED + INSTALLED BY INSTALLER ON SITE

3 A3.0 WALL SECTION
SCALE: 3/4" = 1'-0"

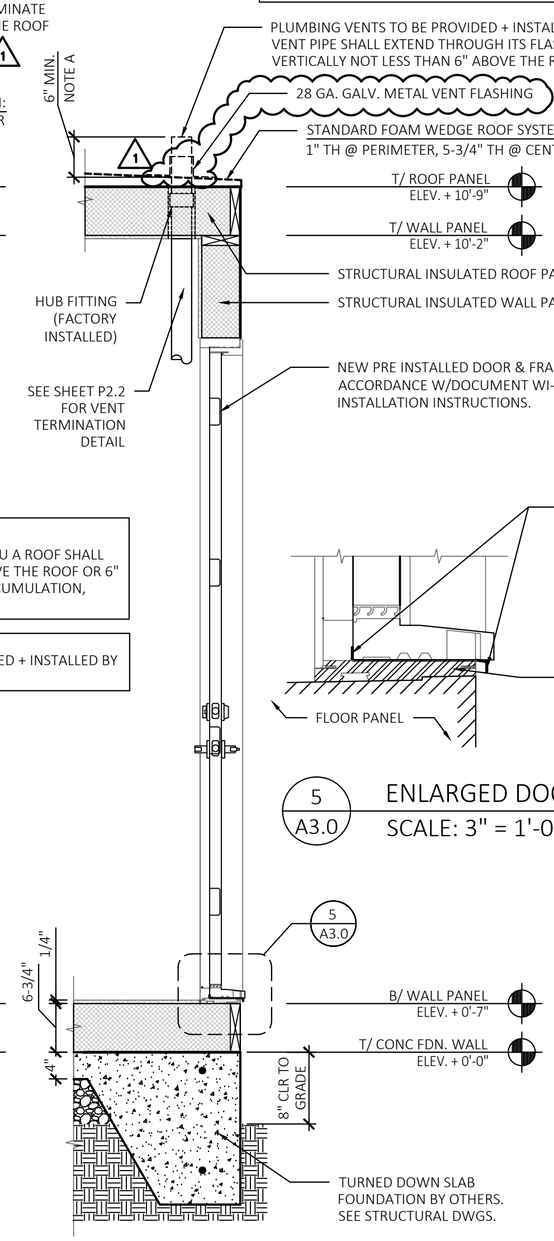

4 A3.0 WALL SECTION
SCALE: 3/4" = 1'-0"

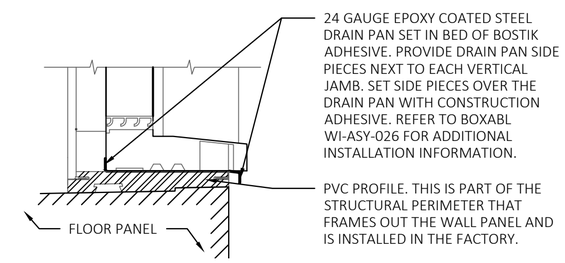

5 A3.0 ENLARGED DOOR SILL PAN DETAIL
SCALE: 3" = 1'-0"

STATE OF ARIZONA
REFER TO SHEET #1

Apr 03 2026

Review of this document does not authorize or approve any omission or deviation from the applicable standards

F9080-10

REGISTERED ARCHITECT CERTIFICATE NO. 34195 JOSEPH A. DEFILIPPIS DATE SIGNED 3-12-26 ARIZONA, U.S.A.
Exp. 9-30-26

DATE:	REV:	DESCRIPTION:
03-13-25	1	PLAN REVIEW COMMENTS

PROFESSIONAL SEAL:

I HEREBY CERTIFY THAT THESE DRAWINGS HAVE BEEN PREPARED UNDER MY DIRECT SUPERVISION AND THAT TO THE BEST OF MY KNOWLEDGE AND BELIEF COMPLY WITH THE CODES AND ORDIANCES FOR PREFABRICATED DWELLING UNITS.

sevan
DESIGN SOLUTIONS, P.C.

Corporate Office:
3025 Highland Parkway | Suite 850
Downers Grove, IL 60515

Contact Information:
info@sevansolutions.com
www.sevansolutions.com

INTEGRITY | RESPECT | TEAMWORK | EXCELLENCE | CHARITY

SHEET MANAGEMENT	
SHEET FORMAT:	ARCH C
SHEET SCALE:	1:3
CREATED BY:	KD
RELEASE DATE:	12/10/2025

SHEET: A3.0

MODEL: BXB-000009
2 DOOR CASITA
(ARIZONA)

ROOF TYPE: FOAM WEDGE ROOF

BOXABL INC.
5345 EAST NORTH BELT ROAD
NORTH LAS VEGAS, NV 89115, USA
+1(702) 500-9000 HELLO@BOXABL.COM

PROPRIETARY AND CONFIDENTIAL
THE INFORMATION CONTAINED IN THIS DRAWING IS THE SOLE PROPERTY OF BOXABL INC. ANY REPRODUCTION IN PART OR AS A WHOLE WITHOUT THE WRITTEN PERMISSION OF BOXABL INC. IS PROHIBITED.

BOXABL

NOTE:
1. CLAMPS TO BE INSTALLED EVERY 32".

2 PEX PIPING MOUNTING CLAMP DETAIL
NOT TO SCALE

NOTE:
1. CLAMPS TO BE INSTALLED EVERY 4 FEET FOR HORIZONTAL PIPING AND EVERY 10 FEET FOR VERTICAL PIPING.

1 DWV PIPING MOUNTING CLAMP DETAIL
NOT TO SCALE

1

GENERAL

1. ALL WORK SHALL BE IN ACCORDANCE WITH ALL AUTHORITIES HAVING JURISDICTION AND SUBJECT TO INSPECTION.
2. HOOK-UP CHARGES, PERMITS AND ALL OTHER EXPENSES RELATED TO A COMPLETE AND FUNCTIONING PLUMBING SYSTEM ARE INCLUDED AS PART OF THE PLUMBING WORK.
3. NOT USED.
4. THE WORK INCLUDED PROVIDING THE PLUMBING SYSTEM AND PROVIDING NEW MATERIALS, FITTINGS AND ACCESSORIES NECESSARY FOR A COMPLETE FUNCTIONING PLUMBING SYSTEM.
5. THE INTENT OF THE DRAWINGS IS TO INDICATE THE GENERAL EXTENT OF WORK REQUIRED FOR THE PROJECT. THE DRAWINGS FOR PLUMBING WORK ARE DIAGRAMMATIC, SHOWING THE GENERAL LOCATION, TYPE, FIXTURE AND EQUIPMENT REQUIRED. THE DRAWINGS SHALL NOT BE SCALED FOR EXACT MEASUREMENTS. REFER TO MANUFACTURER'S STANDARD ROUGH-IN DRAWINGS FOR PLUMBING FIXTURES FOR EXACT LOCATIONS.

BASIC MATERIALS AND METHODS

1. MATERIALS SHALL BEAR UNDERWRITER LABEL WHERE SUCH STANDARDS HAVE BEEN ESTABLISHED AND LISTED BY UNDERWRITER LABORATORIES, INC. MATERIALS, EQUIPMENT AND APPLIANCES SHALL CONFORM TO THE LATEST STANDARDS OF:
   ANSI -AMERICAN NATIONAL STANDARDS INSTITUTE
   ASHRAE -AMERICAN SOCIETY OF HEATING, REFRIGERATION AND AIR CONDITIONING ENGINEERS
   ASME -AMERICAN SOCIETY OF MECHANICAL ENGINEERS
   ASTM -AMERICAN SOCIETY FOR TESTING ENGINEERS
   NEMA NATIONAL ELECTRICAL MANUFACTURER'S ASSOCIATION

COORDINATION

1. COORDINATE WITH THE WORK OF OTHER TRADES.
2. REFER TO ARCHITECTURAL DRAWINGS OR CONSULT ARCHITECT FOR EXACT LOCATION OF FIXTURES, EQUIPMENT, ETC., AND FINAL FINISHED ELEVATIONS PRIOR TO ANY INSTALLATION WORK.
3. COORDINATE WITH GENERAL CONTRACTOR WHO SHALL CONSULT WITH THE OWNER FOR ALLOWABLE DAYS THAT WORK CAN BE PERFORMED AND TO SCHEDULE SYSTEM SHUT DOWNS AS REQUIRED FOR RELOCATION OF RISERS, ETC.

INSTALLATION - GENERAL

1. EXPOSED PIPING IN FINISHED AREA SHALL BE WITH CHROME PLATED ESCUTCHEON AT PIPE ENTRY TO FINISHED AREA.
2. ALL PIPING SHALL BE CONCEALED IN CABINETS AND FIXED FURNISHINGS UNLESS OTHERWISE INDICATED.
3. NOT USED.
4. NOT USED.
5. IF REPAIR WORK IS DONE ON-SITE, ANY WALL, ROOF, OR FLOOR CUTOUTS MUST BE PATCHED TO MATCH EXISTING CONSTRUCTION AND SEALED WEATHER TIGHT. WORK SHALL BE PERFORMED BY CRAFTSMAN SKILLED IN THEIR RESPECTIVE TRADES.
6. ALL PIPING SHALL RUN ALONG INTERIOR SIDE OF EXTERIOR WALLS, SUPPORTED AND ANCHORED AS REQUIRED TO FACILITATE EXPANSION AND CONTRACTION. ALL PIPING SHALL BE CONCEALED EXCEPT FOR UNFINISHED SPACES. INSTALLED AS REQUIRED TO MEET ALL CONSTRUCTION CONDITIONS AND ALLOW FOR INSTALLATION OF OTHER WORK INCLUDING DUCTS AND ELECTRICAL CONDUIT. AT ALL CONNECTIONS BETWEEN FERROUS PIPING AND NONFERROUS PIPING PROVIDE AN ISOLATING DIELECTRIC UNION.
7. PROVIDE ALL FITTINGS, ACCESSORIES, OFFSETS AND MATERIALS NECESSARY TO FACILITATE THE PLUMBING SYSTEMS FUNCTIONING AS INDICATED BY THE DESIGN AND THE EQUIPMENT INDICATED.
8. PROTECTION FIELD PLATES FOR PROTECTION AGAINST PHYSICAL DAMAGE PER IRC-2018 SECTION P2603 DOES NOT APPLY BECAUSE PLUMBING PIPES/LINES DO NOT RUN IN WALL, FLOOR OR ROOF PANELS..
9. ACCESS PANELS SHALL BE PROVIDED WHERE CONCEALED CONTROL DEVICES, VALVES, CLEANOUTS, ETC. ARE CONCEALED WITHIN CABINETRY.
10. THOROUGHLY CLEAN ITEMS BEFORE INSTALLATION, CAP PIPE OPENINGS TO EXCLUDE DIRT UNTIL FIXTURES ARE INSTALLED AND FINAL CONNECTIONS HAVE BEEN MADE. SET FIXTURES LEVEL AND IN PROPER ALIGNMENT. INSTALL SUPPLIES IN PROPER ALIGNMENT WITH FIXTURES. INSTALL SILICONE SEALANT BETWEEN FIXTURES AND ADJACENT MATERIAL FOR SANITARY JOINT.

DOMESTIC WATER PIPING

1. PROVIDE PRESSURE REDUCING VALVE ON PLUMBING SYSTEMS WHERE THE INCOMING WATER SERVICE PRESSURE IS IN EXCESS OF 80 PSI.
2. HOT AND COLD WATER PIPING SHALL BE PEX TUBING. PROVIDE WATER HAMMER ARRESTORS PER DRAWINGS.
3. PROVIDE ISOLATION VALVES FOR EACH BRANCH OFF MAIN SUPPLY.
4. SHUT-OFF VALVES WITH UNIONS SHALL BE PROVIDED FOR SERVICE TO EACH PLUMBING FIXTURE OR OTHER EQUIPMENT ITEM TO FACILITATE ISOLATION FOR REPAIR OR REPLACEMENT.
5. VALVE LOCATION TAGS REQUIRED ON ALL SHUT-OFFS AND LOCATION CHART REQUIRED.
6. THE DOMESTIC WATER SYSTEM SHALL BE FLUSHED, PRESSURE TESTED AND PURIFIED. TEST WATER UNDER 80-100 PSIG HYDROSTATIC PRESSURE FOR 15 MINUTES MINIMUM. WHEN TESTING INDICATES MATERIALS OR WORKMANSHIP IS DEFICIENT, REPLACE OR REPAIR AS REQUIRED, AND REPEAT UNTIL STANDARDS ARE ACHIEVED. ALL PIPING SYSTEMS SHALL BE SUBJECTED TO A DISINFECTION PROCEDURE PER THE RULES AND REGULATIONS OF THE LOCAL AUTHORITIES.
7. HOT WATER PIPING SHALL BE INSULATED. INSULATION SHALL HAVE A THERMAL RESISTANCE, R-VALUE, OF NOT LESS THAN R-3 AND SHALL BE APPLIED TO ALL PIPING 3/4" AND LARGER IN DIAMETER.

SANITARY SEWER, STORM SEWER, AND VENT PIPING

1. ALL OPENINGS IN DRAINAGE AND/OR VENT SYSTEMS AS A RESULT OF DEMOLITION OR INSTALLATION ROUGH-IN SHALL BE PROTECTED WITH A TEST PLUG THAT IS SECURELY LOCKED IN PLACE UNTIL FINAL FINISHED CONNECTIONS ARE INSTALLED.
2. PROVIDE A COMPLETE SYSTEM OF PVC VENT PIPING WITH VENT THRU ROOF.
3. CONDENSATE AND INDIRECT DRAIN PIPING SHALL BE TYPE PVC OR CLEAR VINYL TUBING UP TO 1" ID.
4. DRAINAGE PIPING UNDERGROUND AND OUTSIDE THE BUILDING SHALL BE PVC PIPE AND FITTINGS. (ALTERNATE MATERIALS MAY BE ALLOWED IF APPROVED BY LOCAL CODE AUTHORITIES.)
5. DRAINAGE PIPING INSIDE THE BUILDING SHALL BE PVC PIPE AND FITTINGS WITH SCHEDULE 40 PVC VENTS TO VENT THRU ROOF.
6. PROVIDE CLEANOUTS AS SHOWN ON FLOOR PLAN AND ISOMETRIC ON DRAWING P2.0.
7. ALL NEW DRAINAGE PIPING SHALL BE UNIFORMLY PITCHED, 1/4" PER FOOT UNLESS OTHERWISE REQUIRED BY EXISTING CONDITIONS, MINIMUM SLOPE SHALL BE PER CODE.
8. ALL FLOOR DRAINS SHALL BE CONNECTED TO THE SANITARY SEWER SYSTEM.
9. THE DRAINAGE SYSTEMS SHALL BE FLUSHED AND PRESSURE TESTED.

SUBSTITUTIONS

1. THE NAMING OF MANUFACTURER'S IN THE SPECIFICATIONS SHALL NOT BE CONSTRUED AS ELIMINATING THE MATERIALS, PRODUCTS OR SERVICES OF OTHER MANUFACTURER'S AND SUPPLIERS HAVING EQUIVALENT ITEMS. ANY SUBSTITUTED ITEMS MUST BE EQUAL TO THOSE SPECIFIED, PROVIDE COST SAVINGS AND BE AVAILABLE TO MEET THE CONSTRUCTION SCHEDULE.

PLUMBING SYMBOLS

— CWS —	COLD WATER SUPPLY PIPING
— HWS —	HOT WATER SUPPLY PIPING
— SAN —	SANITARY WASTE PIPING
– – – V – – –	SANITARY VENT PIPING
— – —	COLD WATER SUPPLY PIPING
— – – —	HOT WATER SUPPLY PIPING
– – – – – – –	SANITARY VENT PIPING
BFP	BACKFLOW PREVENTER
CO	CLEANOUT
CP	CHROME PLATED
DN	DOWN
DW	DISHWASHER
ET	EXPANSION TANK
FD	FLOOR DRAIN
GALV	GALVANIZED
INV. EL.	INVERT ELEVATION
IM	ICE MAKER
LAV	LAVATORY
NC	NEW CONNECTION
PRV	PRESSURE REDUCING VALVE
PSIG	POUNDS PER SQUARE INCH
S	SANITARY
SHR	SHOWER
SK	SINK
TMV	THERMOSTATIC MIXING VALVE
V	VENT
VTR	VENT THRU ROOF
W	WASTE
WC	WATER CLOSET
WH	WATER HEATER
	LINE SIZE BALL GATE VALVE
	LINE SIZE BALANCING VALVE
	LINE SIZE BALL VALVE (2" & SMALLER) OR LINE SIZE BUTTERFLY VALVE (2-1/2" & LARGER)
	LINE SIZE CHECK VALVE
	LINE SIZE UNION
	PRESSURE REDUCING VALVE
	PRESSURE RELIEF VALVE
	REDUCER
	THERMOMETER

STATE OF ARIZONA
REFER TO SHEET #1

Apr 03 2026

Review of this document does not authorize or approve any omission or deviation from the applicable standards

F9080-10

REGISTERED PROFESSIONAL ENGINEER (MECHANICAL) CERTIFICATE NO. 35347 JOSEPH G. THOMAS DATE SIGNED 3/13/26 ARIZONA, U.S.A.

EXPIRATION DATE: 9/30/27

WCW Engineers, Inc.
760 Creel Drive
Wood Dale, Illinois 60191
Tel. 630/595-8800
Fax 630/595-8818
www.WCWengineers.com

PLUMBING NOTES, SYMBOLS & ABBREVIATIONS

DATE:	REV:	DESCRIPTION:
03-13-26	1	PLAN REVIEW COMMENTS

PROFESSIONAL SEAL:

I HEREBY CERTIFY THAT THESE DRAWINGS HAVE BEEN PREPARED UNDER MY DIRECT SUPERVISION AND THAT TO THE BEST OF MY KNOWLEDGE AND BELIEF COMPLY WITH THE CODES AND ORDIANCES FOR PREFABRICATED DWELLING UNITS.

sevan
DESIGN SOLUTIONS, P.C.

Corporate Office:
3025 Highland Parkway | Suite 850
Downers Grove, IL 60515

Contact Information:
info@sevansolutions.com
www.sevansolutions.com

INTEGRITY | RESPECT | TEAMWORK | EXCELLENCE | CHARITY

SHEET MANAGEMENT	
SHEET FORMAT:	ARCH C
SHEET SCALE:	1:3
CREATED BY:	KD
RELEASE DATE:	12/10/2025
SHEET:	P1.0

MODEL: BXB-000009
2 DOOR CASITA
(ARIZONA)

ROOF TYPE: FOAM WEDGE ROOF

BOXABL INC.
5345 EAST NORTH BELT ROAD
NORTH LAS VEGAS, NV 89115, USA
+1(702) 500-9000 HELLO@BOXABL.COM

PROPRIETARY AND CONFIDENTIAL
THE INFORMATION CONTAINED IN THIS DRAWING IS THE SOLE PROPERTY OF BOXABL INC. ANY REPRODUCTION IN PART OR AS A WHOLE WITHOUT THE WRITTEN PERMISSION OF BOXABL INC. IS PROHIBITED.

BOXABL

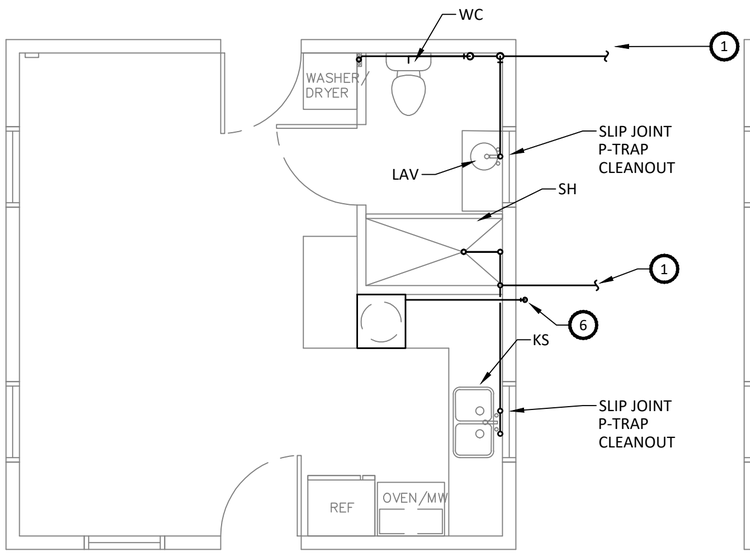

1 PLUMBING SANITARY PLAN
1/4" = 1'-0"

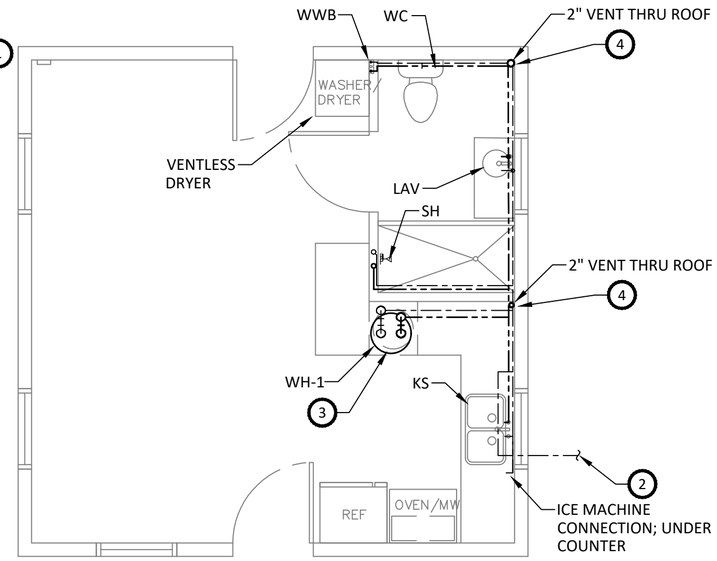

2 PLUMBING DOMESTIC WATER PLAN
1/4" = 1'-0"

PLAN NOTES

1	PROVIDE 2" & 3" SANITARY PIPING TO THE NEW BOXABL HOUSE. COORDINATE WITH CIVIL DRAWINGS THE EXACT LOCATION OF THE NEW SANITARY PIPING.
2	PROVIDE 3/4" DOMESTIC COLD WATER TO NEW BOXABL HOUSE. COORDINATE WITH CIVIL DRAWINGS THE EXACT LOCATION OF THE NEW DOMESTIC COLD WATER PIPING.
3	ACCESS TO THE TANK WATER HEATER IS THRU A REMOVABLE PANEL IN THE CABINET.
4	2" VENT THRU ROOF, SEE PIPING ISOMETRICS FOR ALL VENT PIPING. 2" COUPLING HUB AT EXTERIOR ROOF PANEL FOR ROOF VENT CONNECTION ON SITE. VENT SHALL BE 10' ABOVE BOTTOM OF FLOOR OF UNIT.
5	WHOLE HOUSE WATER HAMMER ARRESTOR MIFAB MODEL CL-A-NPB. WATER HAMMER ARRESTOR TO BE MAUFACTURED BY MIFAB OR AN APPROVED EQUIVALENT.
6	EXTEND 3/4" DRAIN FROM WATER HEATER DRAIN PAN TO EXTERIOR OF BUILDING.

NO PLUMBING PIPES/LINES SHALL RUN WITHIN THE WALL/FLOOR/ROOF PANELS

IRC-2018 SECTION P2603 PROTECTION REQUIREMENT DOES NOT APPLY SINCE PLUMBING PIPES/LINES DO NOT RUN IN WALL/FLOOR/ROOF PANELS.

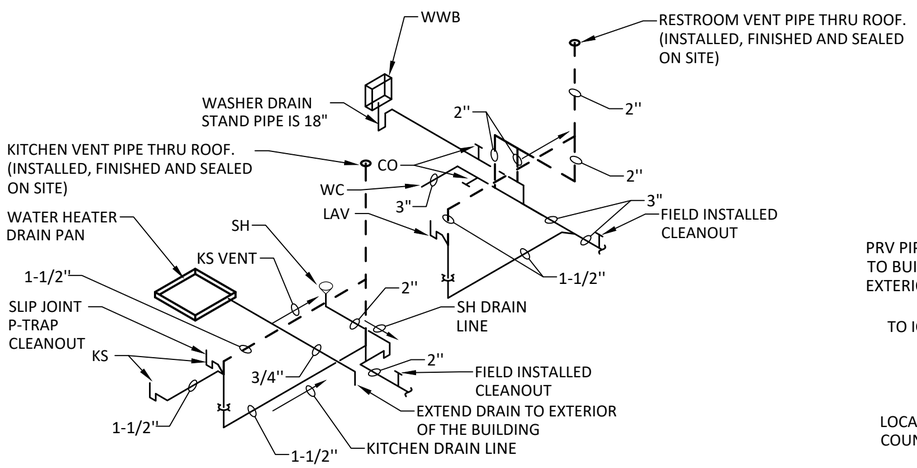

3 PLUMBING SANITARY ISOMETRIC
NOT TO SCALE

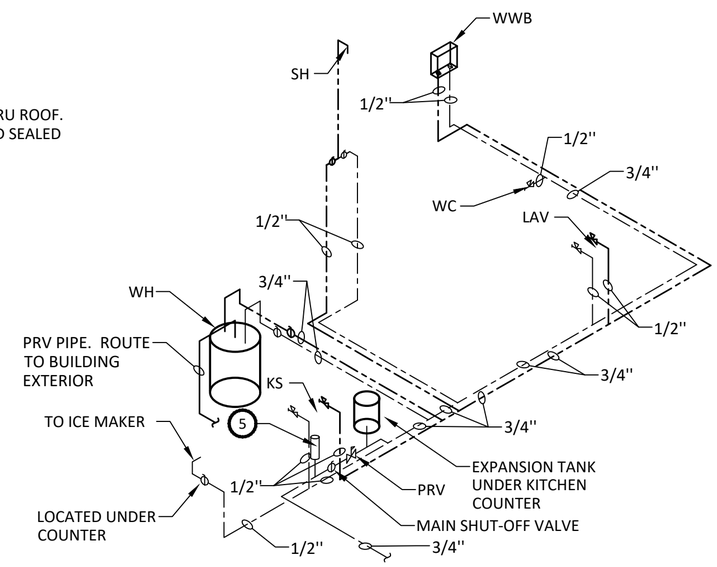

NOTE:
1. ALL HOT WATER PIPES SHALL BE WRAPPED WITH INSULATION WITH A MINIMUM R-3 INSULATING VALUE.

4 PLUMBING DOMESTIC WATER ISOMETRIC
NOT TO SCALE

STATE OF ARIZONA
REFER TO SHEET #1

Apr 03 2026

Review of this document does not authorize or approve any omission or deviation from the applicable standards

F9080-10

REGISTERED PROFESSIONAL ENGINEER (MECHANICAL) CERTIFICATE NO. 35347 JOSEPH G. THOMAS DATE SIGNED 2/13/26 ARIZONA, U.S.A.

EXPIRATION DATE: 9/30/27

WCW Engineers, Inc.
760 Creel Drive
Wood Dale, Illinois 60191
Tel. 630/595-8800
Fax 630/595-8818
www.WCWengineers.com

PLUMBING PLANS

DATE:	REV:	DESCRIPTION:

PROFESSIONAL SEAL:

I HEREBY CERTIFY THAT THESE DRAWINGS HAVE BEEN PREPARED UNDER MY DIRECT SUPERVISION AND THAT TO THE BEST OF MY KNOWLEDGE AND BELIEF COMPLY WITH THE CODES AND ORDIANCES FOR PREFABRICATED DWELLING UNITS.

sevan
DESIGN SOLUTIONS, P.C.

Corporate Office:
3025 Highland Parkway | Suite 850
Downers Grove, IL 60515

Contact Information:
info@sevansolutions.com
www.sevansolutions.com

INTEGRITY | RESPECT | TEAMWORK | EXCELLENCE | CHARITY

SHEET MANAGEMENT	
SHEET FORMAT:	ARCH C
SHEET SCALE:	1:3
CREATED BY:	KD
RELEASE DATE:	12/10/2025

SHEET: P2.0 (SHOWER)

MODEL: BXB-000009 2 DOOR CASITA (ARIZONA)

ROOF TYPE: FOAM WEDGE ROOF

BOXABL INC.
5345 EAST NORTH BELT ROAD
NORTH LAS VEGAS, NV 89115, USA
+1(702) 500-9000 HELLO@BOXABL.COM

PROPRIETARY AND CONFIDENTIAL
THE INFORMATION CONTAINED IN THIS DRAWING IS THE SOLE PROPERTY OF BOXABL INC. ANY REPRODUCTION IN PART OR AS A WHOLE WITHOUT THE WRITTEN PERMISSION OF BOXABL INC. IS PROHIBITED.

BOXABL

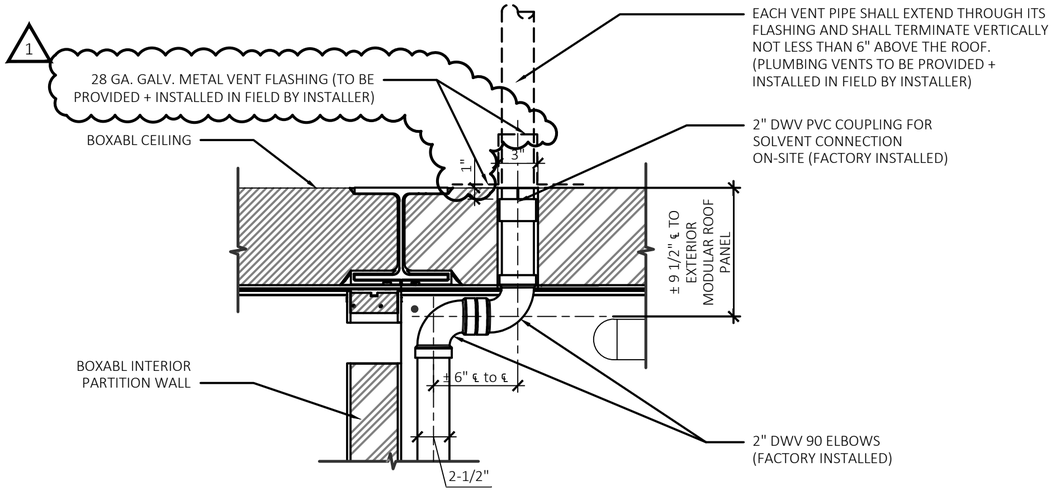

1 KITCHEN VENT TERMINATION DETAIL

SCALE: 1-1/2"=1'-0"

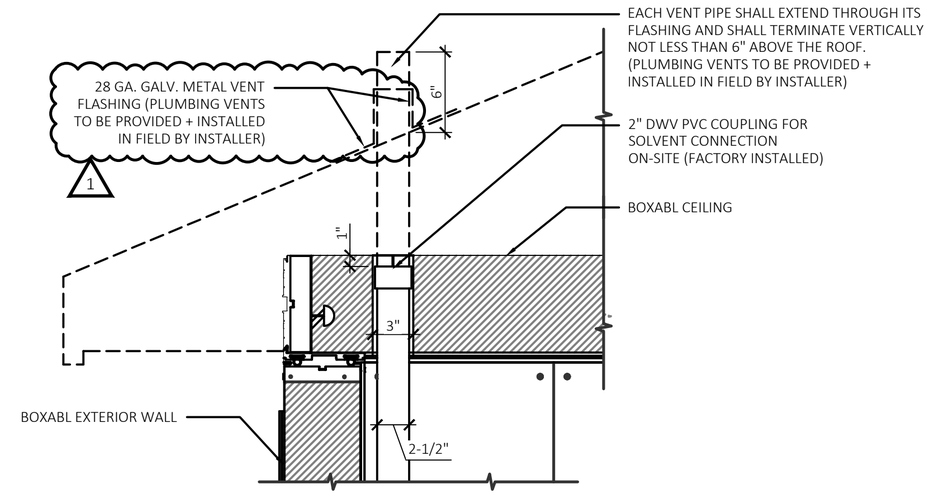

2 BATHROOM VENT TERMINATION DETAIL

SCALE: 1-1/2"=1'-0"

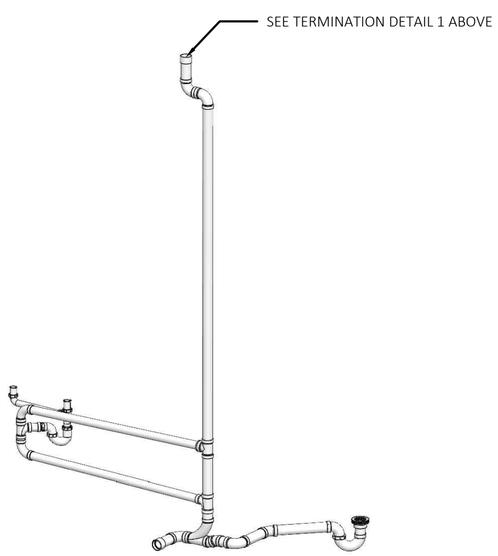

KITCHEN + SHOWER PIPING DIAGRAM

NOT TO SCALE

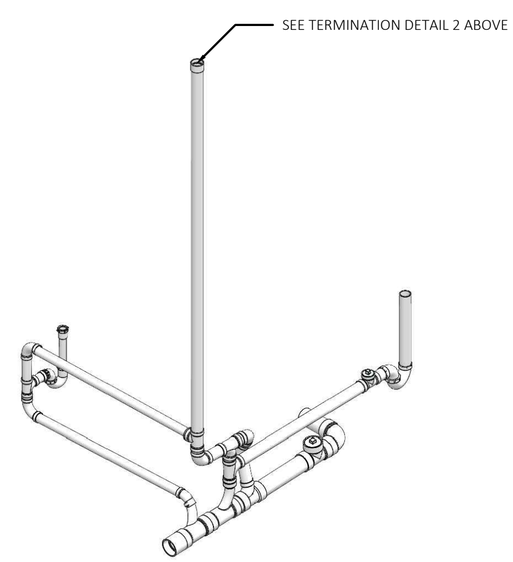

BATHROOM PIPING DIAGRAM

NOT TO SCALE

STATE OF ARIZONA
REFER TO SHEET #1

Apr 03 2026

Review of this document does not authorize or approve any omission or deviation from the applicable standards

F9080-10

REGISTERED PROFESSIONAL ENGINEER (MECHANICAL) CERTIFICATE NO. 35347 JOSEPH G. THOMAS DATE SIGNED 3/13/26 ARIZONA, U.S.A.

EXPIRATION DATE: 9/30/27

WCW Engineers, Inc.
760 Creel Drive
Wood Dale, Illinois 60191
Tel. 630/595-8800
Fax. 630/595-8818
www.WCWengineers.com

PLUMBING VENT PLANS

DATE:	REV:	DESCRIPTION:
03-13-26	1	PLAN REVIEW COMMENTS

PROFESSIONAL SEAL:

I HEREBY CERTIFY THAT THESE DRAWINGS HAVE BEEN PREPARED UNDER MY DIRECT SUPERVISION AND THAT TO THE BEST OF MY KNOWLEDGE AND BELIEF COMPLY WITH THE CODES AND ORDIANCES FOR PREFABRICATED DWELLING UNITS.

sevan
DESIGN SOLUTIONS, P.C.

Corporate Office:
3025 Highland Parkway | Suite 850
Downers Grove, IL 60515

Contact Information:
info@sevansolutions.com
www.sevansolutions.com

INTEGRITY | RESPECT | TEAMWORK | EXCELLENCE | CHARITY

SHEET MANAGEMENT	
SHEET FORMAT:	ARCH C
SHEET SCALE:	1:3
CREATED BY:	KD
RELEASE DATE:	12/10/2025

SHEET: P2.2

MODEL: BXB-000009 2 DOOR CASITA (ARIZONA)

ROOF TYPE: FOAM WEDGE ROOF

BOXABL INC.
5345 EAST NORTH BELT ROAD
NORTH LAS VEGAS, NV 89115, USA
+1(702) 500-9000 HELLO@BOXABL.COM

PROPRIETARY AND CONFIDENTIAL
THE INFORMATION CONTAINED IN THIS DRAWING IS THE SOLE PROPERTY OF BOXABL INC. ANY REPRODUCTION IN PART OR AS A WHOLE WITHOUT THE WRITTEN PERMISSION OF BOXABL INC. IS PROHIBITED.

BOXABL

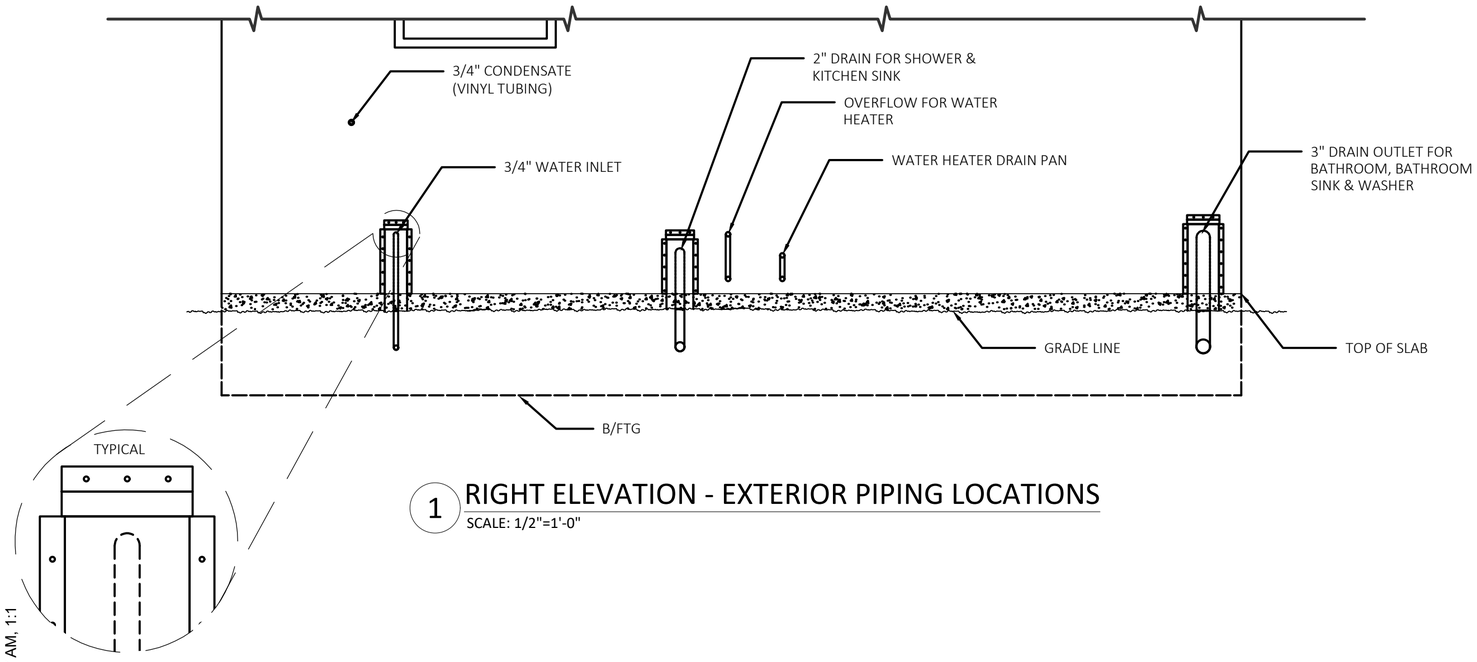

1 RIGHT ELEVATION - EXTERIOR PIPING LOCATIONS
SCALE: 1/2"=1'-0"

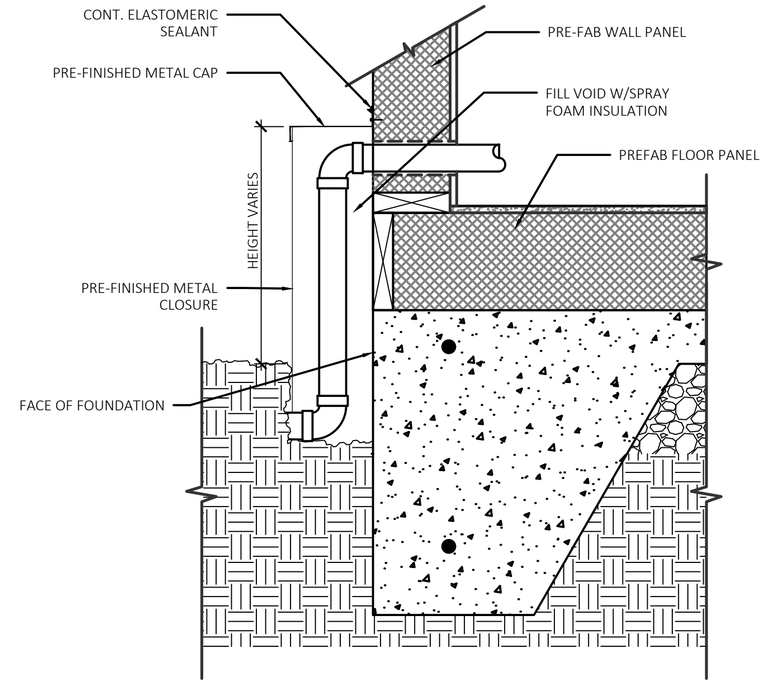

2 SECTION THRU CLOSURE PANEL
SCALE: 1-1/2"=1'-0"

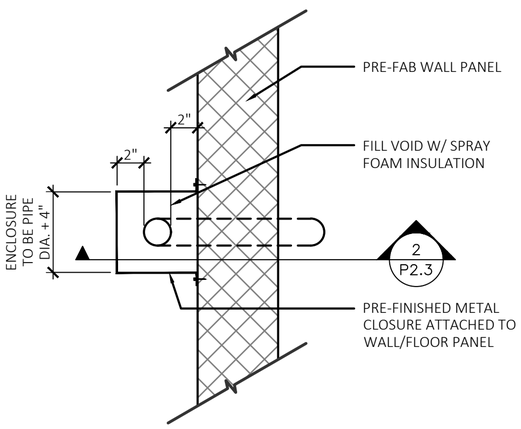

3 PLAN @ CLOSURE PANEL
SCALE: 1-1/2"=1'-0"

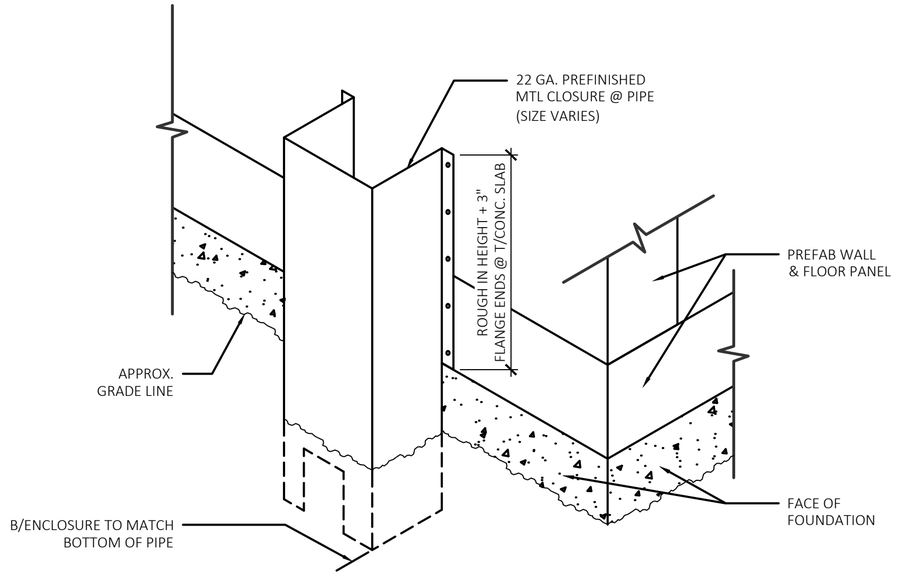

4 METAL CLOSURE PANEL DETAIL
SCALE: 1-1/2"=1'-0"

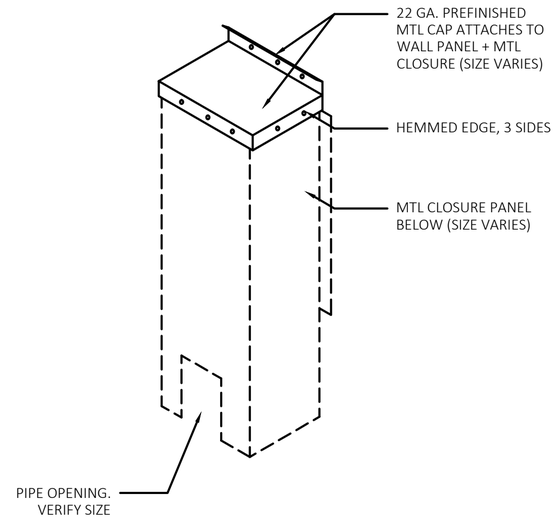

5 METAL CLOSURE CAP DETAIL
SCALE: 1-1/2"=1'-0"

STATE OF ARIZONA
REFER TO SHEET #1

Apr 03 2026

Review of this document does not authorize or approve any omission or deviation from the applicable standards

F9080-10

REGISTERED PROFESSIONAL ENGINEER (MECHANICAL) CERTIFICATE NO. 35347 JOSEPH G. THOMAS DATE SIGNED 12/8/25 ARIZONA, U.S.A.

EXPIRATION DATE: 9/30/27

WCW Engineers, Inc.
760 Creel Drive
Wood Dale, Illinois 60191
Tel. 630/595-8800
Fax 630/595-8818
www.WCWengineers.com

PLUMBING DRAIN PIPE TERMINATION PLANS

DATE:	REV:	DESCRIPTION:

PROFESSIONAL SEAL:

I HEREBY CERTIFY THAT THESE DRAWINGS HAVE BEEN PREPARED UNDER MY DIRECT SUPERVISION AND THAT TO THE BEST OF MY KNOWLEDGE AND BELIEF COMPLY WITH THE CODES AND ORDIANCES FOR PREFABRICATED DWELLING UNITS.

sevan
DESIGN SOLUTIONS, P.C.

Corporate Office:
3025 Highland Parkway | Suite 850
Downers Grove, IL 60515

Contact Information:
info@sevansolutions.com
www.sevansolutions.com

INTEGRITY | RESPECT | TEAMWORK | EXCELLENCE | CHARITY

SHEET MANAGEMENT	
SHEET FORMAT:	ARCH C
SHEET SCALE:	1:3
CREATED BY:	KD
RELEASE DATE:	12/10/2025
SHEET:	P2.3

MODEL: BXB-000009 2 DOOR CASITA (ARIZONA)

ROOF TYPE: FOAM WEDGE ROOF

BOXABL INC.
5345 EAST NORTH BELT ROAD
NORTH LAS VEGAS, NV 89115, USA
+1(702) 500-9000 HELLO@BOXABL.COM

PROPRIETARY AND CONFIDENTIAL
THE INFORMATION CONTAINED IN THIS DRAWING IS THE SOLE PROPERTY OF BOXABL INC. ANY REPRODUCTION IN PART OR AS A WHOLE WITHOUT THE WRITTEN PERMISSION OF BOXABL INC. IS PROHIBITED.

BOXABL

H:\23333\Dwg-Updated - Current\Boxabl BXB-000009\23333_P2.3BXB-000009 AZ Updated.dwg, P2.3 - Drain Pipe Termination, 12/8/2025 10:26:37 AM, 1:1

FIXTURE SCHEDULES

FIXTURE	TYPE	FIXTURE			FAUCET			WATER USAGE	TRAP	SUPPLY FITTING	REMARKS
		MFG'R.	MODEL NO.	COLOR	MFG'R.	MODEL NO.	COLOR				
WC	WATER CLOSET	SANIFLO	083 & 005	WHITE	N/A	N/A	N/A	1.28 GPF	INTERGRAL P-TRAP	3/8"	
LAV	LAVATORY	SANITARY WARE TECHNOLOGY	9533	WHITE	MOEN	BL6790BH	BLACK	1.2 GPM	N/A	3/8"	
KS	KITCHEN SINK	AQUACUBIC	PLU-000166	BLACK	MOEN	5925L	BLACK	1.5 GPM	N/A	3/8"	
SH	SHOWER	AQUATIC	16034STTSM(L)	WHITE	MOEN	T2472EPBL	BLACK	1.75 GPM	N/A	1/2"	
WWB-1	WASHER WALL BOX	SIOUX CHIEF	688-G10	WHITE	N/A	N/A	N/A	N/A	N/A	2 @1/2"	

NOTE: FIXTURES TO BE PROVIDE BY MANUFACTURER AS SCHEDULED OR AN APPROVED EQUIVALENT.

WATER HEATER SCHEDULE

DESIG'N.	TYPE	MFG'R.	MODEL NO.	STORAGE GALLON CAPACITY	FIRST HOUR RATING GALLONS	ELECTRICAL			RECOVERY AT 80°F RISE	TANK LINING	WARRANTY	UEF	REMARKS
						KW	VOLTAGE	PHASE					
WH-1	TANK	BRADFORD WHITE	RE130L6	28	45	4.5	240	SINGLE	23	YES	YES	0.92	

NOTE: WATER HEATER TO BE MANUFACTURED BY BRADFORD WHITE OR AN APPROVED EQUAL.
WATER HEATER IS UNVENTED TYPE AND IS NOT PROVIDED WITH A FLUE COLLAR. WATER HEATER DOES NOT HAVE A VENT CONNECTION PER MANUFACTURER INSTALLATION MANUAL. WATER HEATER IS LISTED TO UL 174 WHICH DOES NOT STATE ANY REQUIREMENT FOR ELECTRIC WATER HEATER VENTILATION.

WATER SUPPLY FIXTURE UNITS (2018 IRC table P2903.6)

Quantity	Fixture Tag	Fixture	Occupancy	Type of Supply Control	Load Values in water supply fixture units (wsfu) Cold	Hot	Total	Total Load Values in water supply fixture units (wsfu) Cold	Hot	Total
1	DW	Dishwashing machine	Private	Automatic	0.00	1.40	1.40	0.00	1.40	1.40
1	IM	Ice Machine	Private	3/8" valve	0.50	0.00	0.50	0.50	0.00	0.50
1	KS	Kitchen Sink	Private	Faucet	1.00	1.00	1.40	1.00	1.00	1.40
1	LAV	Lavatory	Private	Faucet	0.50	0.50	0.70	0.50	0.50	0.70
1	SH	Shower head	Private	Mixing valve	1.00	1.00	1.40	1.00	1.00	1.40
1	WM	Washing Machine (8 lb)	Private	Automatic	1.00	1.00	1.40	1.00	1.00	1.40
1	WC	Water closet	Private	Flush tank	2.20	0.00	2.20	2.20	0.00	2.20
				Total WSFU				6.20	4.90	9.00

DRAINAGE FIXTURE UNITS (2018 IRC table P3004.1)

Quantity	Fixture Tag	Fixture Type	Drainage Fixture Unit Value As Load Factors	Minimum Size of Trap (inches)	Total Drainage Fixture Unit Value As Load Factors
1	WM	Automatic clothes washers, residential	2.00	2.00	2.00
1	DW	Dishwashing machine, domestic	2.00	1.50	2.00
1	KS	Kitchen sink, domestic	2.00	1.50	2.00
1	LAV	Lavatory	1.00	1.25	1.00
1	SH1	Shower Flow Rate 5.7 gpm or less	2.00	2.00	2.00
1	WC	Water closet, private (1.6 gpf)	3.00	3.00	3.00
		Total DFU's			12.00

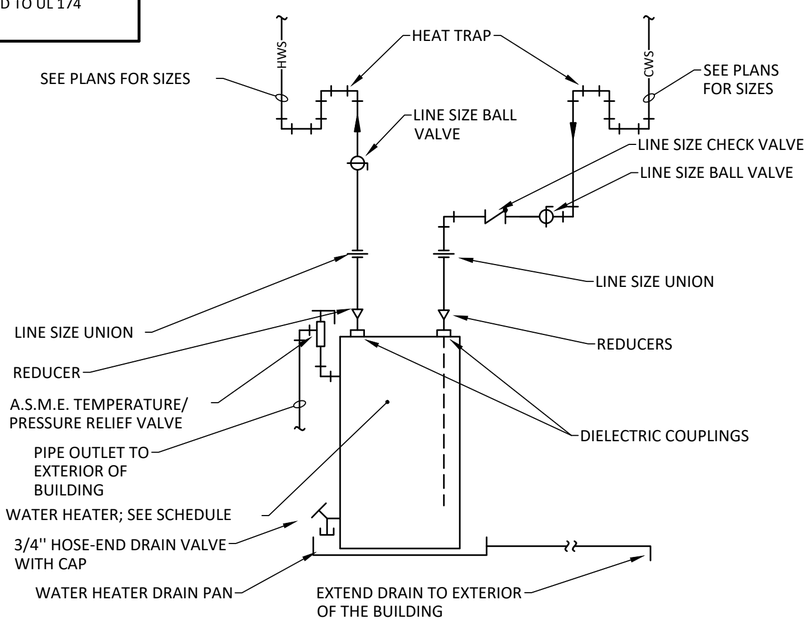

DOMESTIC WATER HEATER PIPING DETAIL - ELECTRIC

NOT TO SCALE

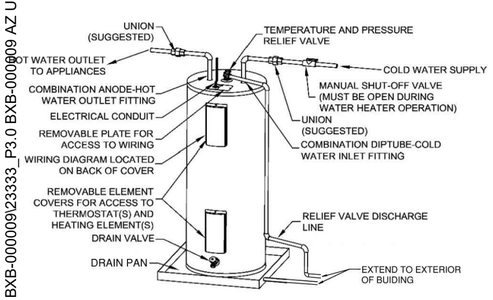

General Features	
Rated Nominal Volume (Gallons):	28
DOE Rated Storage Volume (Gallons):	23
Fuel Type:	Electric
Energy Star:	No
Connectivity:	Not WiFi Compatible

Weights and Dimensions	
Overall Height (in.):	31.813
Height (Floor To Top of Heater - in.):	29.563
Jacket Diameter (in.):	20
Weight (lbs.):	108

Performance	
Element Watts:	4500
First Hour Delivery Rating (Gal.):	45
Uniform Energy Factor (UEF):	0.95
Recovery at 90°F Rise (GPH):	21

Venting and Connection Requirements	
Venting:	Non-Vented
Water Connection Size (in.):	3/4" NPT

DOMESTIC WATER HEATER TECHNICAL INFORMATION

NOT TO SCALE

STATE OF ARIZONA
REFER TO SHEET #1

Apr 03 2026

Review of this document does not authorize or approve any omission or deviation from the applicable standards

F9080-10

REGISTERED PROFESSIONAL ENGINEER (MECHANICAL) CERTIFICATE NO. 35347 JOSEPH G. THOMAS DATE SIGNED 12/8/25 ARIZONA, U.S.A.

EXPIRATION DATE: 9/30/27

WCW Engineers, Inc.
760 Creel Drive
Wood Dale, Illinois 60191
Tel. 630/595-8800
Fax 630/595-8818
www.WCWengineers.com

PLUMBING DETAILS

DATE:	REV:	DESCRIPTION:

PROFESSIONAL SEAL:

I HEREBY CERTIFY THAT THESE DRAWINGS HAVE BEEN PREPARED UNDER MY DIRECT SUPERVISION AND THAT TO THE BEST OF MY KNOWLEDGE AND BELIEF COMPLY WITH THE CODES AND ORDIANCES FOR PREFABRICATED DWELLING UNITS.

sevan
DESIGN SOLUTIONS, P.C.

Corporate Office:
3025 Highland Parkway | Suite 850
Downers Grove, IL 60515

Contact Information:
info@sevansolutions.com
www.sevansolutions.com

INTEGRITY | RESPECT | TEAMWORK | EXCELLENCE | CHARITY

SHEET MANAGEMENT	
SHEET FORMAT:	ARCH C
SHEET SCALE:	1:3
CREATED BY:	KD
RELEASE DATE:	12/10/2025

SHEET: P3.0 (SHOWER)

MODEL: BXB-000009 2 DOOR CASITA (ARIZONA)

ROOF TYPE: FOAM WEDGE ROOF

BOXABL INC.
5345 EAST NORTH BELT ROAD
NORTH LAS VEGAS, NV 89115, USA
+1(702) 500-9000 HELLO@BOXABL.COM

PROPRIETARY AND CONFIDENTIAL
THE INFORMATION CONTAINED IN THIS DRAWING IS THE SOLE PROPERTY OF BOXABL INC. ANY REPRODUCTION IN PART OR AS A WHOLE WITHOUT THE WRITTEN PERMISSION OF BOXABL INC. IS PROHIBITED.

BOXABL

H:\23333\Dwg Updates - Current\Boxabl BXB-000009\23333_P3.0 BXB-000009 AZ Updated.dwg, P3.0, 12/8/2025 10:31:34 AM, 1:1

GENERAL

1. MECHANICAL SYSTEMS SHALL BE INSTALL IN ACCORDANCE WITH ALL APPLICABLE BUILDING CODES.

2. DRAWINGS FOR MECHANICAL WORK ARE DIAGRAMMATIC, SHOWING THE GENERAL LOCATION, TYPE, LAYOUT AND EQUIPMENT REQUIRED. THE DRAWINGS SHALL NOT BE SCALED FOR EXACT MEASUREMENTS. REFER TO MANUFACTURERS STANDARD INSTALLATION DRAWINGS FOR EQUIPMENT CONNECTIONS AND INSTALLATION REQUIREMENTS AS REQUIRED. FURNISH AND INSTALL DUCTWORK, CONNECTIONS, ACCESSORIES, OFFSETS AND MATERIALS NECESSARY TO FACILITATE THE SYSTEMS FUNCTIONING AS INDICATED BY THE DESIGN AND THE EQUIPMENT INDICATED. THE WORK SHALL BE IN ACCORDANCE WITH LOCAL CODES AND ORDINANCES AND SUBJECT TO INSPECTION.

3. THE MECHANICAL SYSTEMS SHALL BE COMPLETE WITH ALL NECESSARY APPURTENANCES FOR A COMPLETE OPERATING SYSTEM.

4. THE CONTRACTOR SHALL WARRANTEE ALL MATERIAL AND GUARANTEE ALL WORKMANSHIP FOR ONE YEAR FROM SUBSTANTIAL COMPLETION.

BASIC MATERIALS AND METHODS

1. MATERIALS SHALL BEAR UNDERWRITERS LABEL WHERE SUCH STANDARDS HAVE BEEN ESTABLISHED AND LISTED BY UNDERWRITER'S LABORATORIES, INC. MATERIALS, EQUIPMENT AND APPLIANCES SHALL CONFORM TO THE LATEST STANDARDS OF:
   - AMCA -AIR MOVING AND CONDITIONING ASSOCIATIONS, INC.
   - SMACNA -SHEET METAL AND AIR CONDITIONING CONTRACTOR NATIONAL ASSOCIATION, INC.
   - ASHRAE -AMERICAN SOCIETY OF HEATING, REFRIGERATION AND AIR CONDITIONING ENGINEERS
   - ASME -AMERICAN SOCIETY OF MECHANICAL ENGINEERS
   - ASTM -AMERICAN SOCIETY FOR TESTING MATERIALS
   - NEMA -NATIONAL ELECTRICAL MANUFACTURER'S ASSOCIATION
   - ARI -AIR CONDITIONING AND REFRIGERATION INSTITUTE
   - ANSI -AMERICAN NATIONAL STANDARDS INSTITUTE

COORDINATION

1. COORDINATE WITH GENERAL CONTRACTOR FOR ALLOWABLE DAYS OF WEEK AND TIMES OF DAY FOR SYSTEMS SHUT DOWNS AS REQUIRED FOR THE CONSTRUCTION WORK.

2. THE MECHANICAL CONTRACTOR SHALL COORDINATE DUCTWORK INSTALLATION WITH ARCHITECTS/OWNERS REPRESENTATIVE IN FIELD AND OTHER TRADES.

3. THE MECHANICAL CONTRACTOR SHALL COORDINATE VOLTAGE OF ALL EQUIPMENT WITH ELECTRICAL PRIOR TO ORDERING EQUIPMENT.

INSTALLATION

1. CORE-DRILL OR SAW-CUT FLOOR, WALL, ROOF, ETC. AS REQUIRED FOR PIPING OR DUCTWORK AND FIRE-STOP OPENING AROUND PIPE OR DUCTWORK. VERIFY LOCATION OF STRUCTURAL BEAMS, JOISTS, ETC. BEFORE DRILLING OR CUTTING. NOTIFY ARCHITECT OF ANY DISCREPANCIES.

2. WHEREVER FOUNDATION WALLS, OUTSIDE WALLS, ROOFS, ETC. ARE CUT FOR INSTALLATION OF SYSTEMS, THEY SHALL BE PATCHED TO MATCH EXISTING CONSTRUCTION AND SEALED WEATHER-TIGHT. WORK SHALL BE PERFORMED BY CRAFTSMEN SKILLED IN THEIR RESPECTIVE TRADES.

3. ALL PIPING THAT IS EXPOSED TO VIEW SHALL BE ROUTED AS HIGH AS POSSIBLE AND TIGHT TO THE UNDERSIDE OF THE STRUCTURAL ABOVE.

4. ALL OUTSIDE AIR INTAKES SHALL BE A MINIMUM OF 10'-0" AWAY FROM EXHAUST DISCHARGE OPENINGS AND PLUMBING VENT STACKS.

EQUIPMENT

1. THE MECHANICAL CONTRACTOR SHALL INSTALL MECHANICAL SYSTEMS AS SHOWN, NOTED AND SPECIFIED. EQUIPMENT MAY NOT BE SUBSTITUTED UNLESS WRITTEN APPROVAL BY THE ARCHITECT, ENGINEER OR OWNER'S REPRESENTATIVE IS OBTAINED. ANY CHANGES TO THE DUCTWORK LAYOUT WILL NECESSITATE SUBMISSION OF SHEET METAL SHOP DRAWINGS FOR ENGINEER'S REVIEW. ANY UNAUTHORIZED CHANGES WILL BE REMOVED AT CONTRACTOR'S EXPENSE, IF DEEMED NECESSARY BY ARCHITECT, ENGINEER, OR OWNER'S REPRESENTATIVE.

2. UPON SELECTION OF THE MECHANICAL APPLIANCES, SUBMIT THE MANUFACTURER'S INSTALLATION INSTRUCTIONS TO THE BUILDING DEPARTMENT, INCLUDING LISTING FOR OUTSIDE INSTALLATION WHERE APPLICABLE.

AIR DISTRIBUTION

1. ALL DUCTWORK SHALL BE FABRICATED ACCORDING TO THE SMACNA LOW VELOCITY DUCT MANUAL, ASHRAE HANDBOOK VOLUME "HVAC SYSTEMS AND EQUIPMENT", AND TYPICAL DUCTWORK DETAILS SHOWN IN THESE DRAWINGS. ALL ELBOWS SHALL HAVE PROPER RADIUS. SIZES SHOW ON PLAN ARE INSIDE FREE AREA.

2. ALL FLEXIBLE DUCTWORK SHALL FACTORY ASSEMBLED CLASS 1 AIR DUCT (UL 181) WITH FIBERGLASS INSULATION AND REINFORCED OUTER PROTECTIVE COVER/VAPOR BARRIER. FLEX DUCT SHALL MEET NFPA 90A WITH FLAME SPREAD UNDER 25, SMOKE DEVELOPED UNDER 50, AND SHALL BE RATED FOR 2" W.C. PRESSURE AND 0 TO 250 DEGREE TEMPERATURE. MAXIMUM STRETCHED OUT LENGTH SHALL BE AS PER CODES.

3. PROVIDE UL APPROVED FIRE DAMPERS FOR ALL PENETRATIONS THROUGH FIRE RATED WALLS, PARTITIONS, CEILINGS, AND FLOORS. INSTALL FIRE DAMPERS AS PER MANUFACTURER'S DIRECTIONS AND PER UL GUIDELINES. PROVIDE ACCESS AS REQUIRED FOR SERVICING OF FIRE DAMPERS.

4. ALL CONTRACTOR FABRICATED AND MANUFACTURER FABRICATED COMPONENTS OF THE OUTSIDE AIR, SUPPLY AIR, RETURN AIR AND EXHAUST SYSTEMS SHALL BE CONSTRUCTED AND INSTALLED AIR-TIGHT. THE INSTALLED SYSTEMS SHALL BE PRESSURE TESTED AS SPECIFIED. PIPE OPENINGS IN SYSTEM COMPONENTS SHALL HAVE SHEET METAL BAFFLES, SET IN SEALANT, TO PREVENT LEAKAGE.

AUTOMATIC TEMPERATURE CONTROLS

1. CONTRACTOR SHALL FURNISH AND INSTALL ALL CONTROL WIRING AS REQUIRED. THERMOSTATS SHALL BE AS SPECIFIED OR AS FURNISHED WITH THE EQUIPMENT. PROVIDE TRANSFORMERS AS REQUIRED.

REFRIGERANT PIPING

1. REFRIGERANT PIPING TO BE PYTHON LINE SETS FOR RESIDENTIAL AND COMMERCIAL APPLICATIONS. ICC-ES PMG-1675 LISTED. MAXIMUM DESIGN PRESSURE 700 PSI, MAXIMUM DESIGN TEMPERATURE 203°F. APPROVED REFRIGERANTS R-410a, R32 AND R454b.

TESTING AND BALANCING

1. BALANCING CONTRACTOR SHALL BALANCE SYSTEMS TO AIR QUANTITIES SHOWN ON PLAN. BALANCING CONTRACTOR SHALL USE DUCT MOUNTED MANUAL DAMPERS FOR AIR SYSTEM BALANCING. USE OF A TERMINAL DAMPER IS NOT ACCEPTABLE.
2. TESTING AND BALANCING CONTRACTOR SHALL TEST ALL HVAC EQUIPMENT TO ENSURE PROPER OPERATION, TEST ALL CONTROLS TO ENSURE PROPER OPERATION, CALIBRATION AND ADJUSTMENT OF CONTROLS, AND TEST ECONOMIZERS TO ENSURE PROPER OPERATION.

3. THE ARCHITECT AND/OR OWNER'S REPRESENTATIVE SHALL BE NOTIFIED 48 HOURS OR MORE PRIOR TO FINAL TESTING AND BALANCING WORK SO THAT THEY AND/OR THE ENGINEER MAY BE PRESENT TO OBSERVE THIS WORK. THE BALANCING CONTRACTOR SHALL SUBMIT WRITTEN REPORTS OF ALL AIR FLOW READINGS, STATIC PRESSURES, GPM RATES, PRESSURE READINGS, TEMPERATURE READINGS, MOTOR AMPERAGE, ETC., TO DOCUMENT PROPERLY OPERATING AND BALANCED MECHANICAL SYSTEMS IN ALL AREAS. A COPY OF THE TEST AND BALANCE REPORT SHALL BE SUBMITTED TO THE AUTHORITIES HAVING JURISDICTION PRIOR TO FINAL INSPECTION AND REQUESTING OCCUPANCY.

CLOSEOUT DOCUMENTATION

1. THE CONTRACTOR SHALL FURNISH TO THE BUILDING OWNER WITHIN 90 DAYS OF DATE OF RECEIPT OF THE CERTIFICATE OF OCCUPANCY THE FOLLOWING;
   - A. OPERATING AND MAINTENANCE MANUAL. MANUAL SHALL CONSIST OF MANUFACTURER'S RECOMMENDATIONS, PROGRAMMING PROCEDURES AND DATA POINTS, NARRATIVE AND OTHER MEANS OF ILLUSTRATING TO THE OWNER HOW THE BUILDING, EQUIPMENT AND SYSTEMS ARE INTENDED TO BE INSTALLED, MAINTAINED AND OPERATED.
   - B. AS-BUILT HVAC DRAWINGS.
   - C. BALANCE REPORT OF HVAC SYSTEMS.

MECHANICAL ABBREVIATIONS

A.D.	ACCESS DOOR
A.F.F.	ABOVE FINISHED FLOOR
ACCU	AIR COOLED CONDENSING UNIT
CC	COOLING COIL
CV	CONTROL VALVE
EF	EXHAUST AIR FAN
F.C.U	FAN COIL UNIT
N.T.S.	NOT TO SCALE
S.C.D.	SEE CONSTRUCTION DRAWINGS
S.S.	STAINLESS STEEL
T	THERMOSTAT
U.N.O.	UNLESS NOTED OTHERWISE
ARCH	ARCHITECT OR ARCHITECTURAL
BLD'G	BUILDING
BOT.	BOTTOM
CL'G.	CEILING
CONC.	CONCRETE
DET.	DETAIL
DN.	DOWN
DWG.	DRAWING
E.A.T.	ENTERING AIR TEMPERATURE
GA.	GAUGE
H/AC	HEATING AND AIR CONDITIONING
L.A.T.	LEAVING AIR TEMPERATURE
MT'D	MOUNTED
S.S.T.	SATURATED SUCTION TEMPERATURE
T.S.P.	TOTAL STATIC PRESSURE
W/	WITH
Ø	DIAMETER/ROUND
0'-0''	ELEVATION FROM FINISH FLOOR

MECHANICAL SYMBOLS

T DEVICE	THERMOSTAT WITH DEVICE CONTROLLED.
CD	CONDENSATE DRAINAGE PIPING
L	REFRIGERANT LIQUID PIPING
S	REFRIGERANT SUCTION PIPING
	LINE SIZE GATE VALVE
	LINE SIZE BALL VALVE (2'' & SMALLER) OR LINE SIZE BUTTERFLY VALVE (2-1/2'' & LARGER)
	LINE SIZE BALANCING VALVE
	LINE SIZE CHECK VALVE
	LINE SIZE UNION

STATE OF ARIZONA
REFER TO SHEET #1

Apr 03 2026

Review of this document does not authorize or approve any omission or deviation from the applicable standards

F9080-10

REGISTERED PROFESSIONAL ENGINEER (MECHANICAL) CERTIFICATE NO. 35347 JOSEPH G. THOMAS DATE SIGNED 12/8/25 ARIZONA, U.S.A.

EXPIRATION DATE: 9/30/27

WCW Engineers, Inc.
760 Creel Drive
Wood Dale, Illinois 60191
Tel. 630/595-8800
Fax 630/595-8818
www.WCWengineers.com

MECHANICAL NOTES SYMBOLS & ABBREVIATIONS

DATE:	REV:	DESCRIPTION:

PROFESSIONAL SEAL:

I HEREBY CERTIFY THAT THESE DRAWINGS HAVE BEEN PREPARED UNDER MY DIRECT SUPERVISION AND THAT TO THE BEST OF MY KNOWLEDGE AND BELIEF COMPLY WITH THE CODES AND ORDIANCES FOR PREFABRICATED DWELLING UNITS.

sevan
DESIGN SOLUTIONS, P.C.

Corporate Office:
3025 Highland Parkway | Suite 850
Downers Grove, IL 60515

Contact Information:
info@sevansolutions.com
www.sevansolutions.com

INTEGRITY | RESPECT | TEAMWORK | EXCELLENCE | CHARITY

SHEET MANAGEMENT	
SHEET FORMAT:	ARCH C
SHEET SCALE:	1:3
CREATED BY:	KD
RELEASE DATE:	12/10/2025

SHEET: M1.0

MODEL: BXB-000009
2 DOOR CASITA
(ARIZONA)

ROOF TYPE: FOAM WEDGE ROOF

BOXABL INC.
5345 EAST NORTH BELT ROAD
NORTH LAS VEGAS, NV 89115, USA
+1(702) 500-9000 HELLO@BOXABL.COM

PROPRIETARY AND CONFIDENTIAL
THE INFORMATION CONTAINED IN THIS DRAWING IS THE SOLE PROPERTY OF BOXABL INC. ANY REPRODUCTION IN PART OR AS A WHOLE WITHOUT THE WRITTEN PERMISSION OF BOXABL INC. IS PROHIBITED.

BOXABL

H:\23333\Dwg\Updated - Current\Boxabl BXB-000009\23333_M1.0 BXB-000009 AZ Updated.dwg, M1.0, 12/8/2025 10:33:34 AM, 1:1

WHOLE HOUSE VENTILATION SYSTEM REQUIREMENTS PER 2018 INTERNATIONAL RESIDENTIAL CODE (IRC):

A WHOLE HOUSE VENTILATION SYSTEM IS TO BE PROVIDED PER THE 2018 INTERNATIONAL RESIDENTIAL CODE SECTION R303.4.

PER SECTION R303.4 - MECHANICAL VENTILATION, A WHOLE HOUSE MECHANICAL VENTILATION SYSTEM SHALL BE PROVIDED IN ACCORDANCE WITH SECTION M1505.4.

PER SECTION 1505.4, OUTDOOR AIR TO BE PROVIDED AT A CONTINUOUS RATE BASE ON TABLE M1507.3.3(1), FOR A DWELLING UNIT <1,500 SQUARE FEET WITH 0-1 BEDROOMS AN AIRFLOW OF 30 CFM IS REQUIRED.

PER THE EXCEPTION IN SECTION M1505.4.3, THE SYSTEM IS ALLOWED TO OPERATE INTERMITTENTLY FOR NOT LESS THAN 25% PER A 4 HOUR SEGMENT.

INTERMITTENT WHOLE HOUSE VENT RATE FACTOR.

FAN CFM/O.A. REQUIREMENT = 70/30 = 2.33.

PER TABLE M1505.4.3(1) , THE WHOLE HOUSE VENTILATION SYSTEM MUST OPERATE 45% OF THE TIME FOR EACH 4 HOUR SEGMENT.

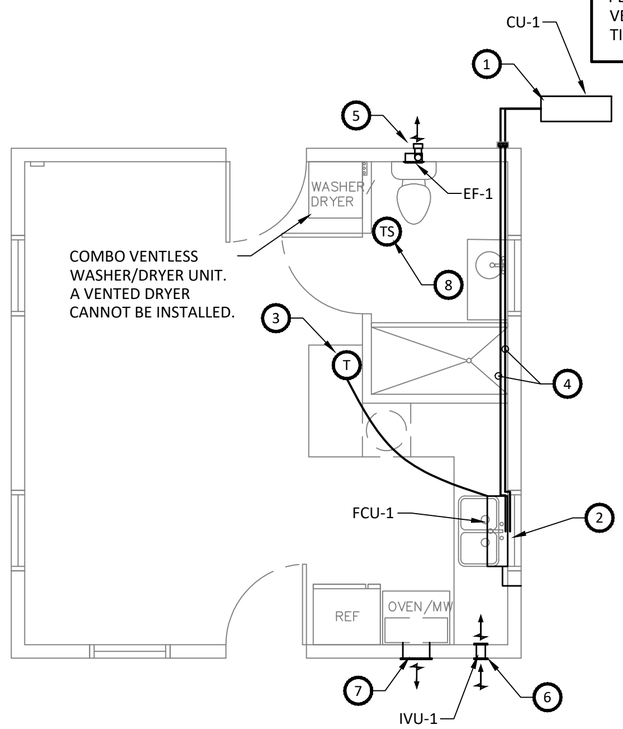

1 MECHANICAL PLAN

1/4" = 1'-0"

PLAN NOTES

1	NEW CONDENSING UNIT, CU-1. PROVIDE CONCRETE PAD TO HAVE THE CONDENSING UNIT ON A LEVEL SURFACE. COORDINATE EXACT LOCATION WITH ARCHITECT AND BUILDING OWNER.
2	TERMINATE CONDENSATE DRAIN FROM FCU-1 TO EXTERIOR. PROVIDE SPLASH BLOCK ON GRADE. COORDINATE EXACT LOCATION WITH ARCHITECT AND BUILDING OWNER.
3	PROGRAMMABLE THERMOSTAT (PROVIDED WITH UNIT). MOUNTED 48" MAXIMUM ABOVE FLOOR.
4	THE REFRIGERATION PIPING FOR THE FACTORY-INSTALLED FCU ABOVE THE KITCHEN SINK IS ROUTED AS FOLLOWS: REFRIGERATION PIPING LINE SET EXITS THE FCU THROUGH THE BACK OF THE UNIT AND IS ROUTED TO THE PREFABRICATED SOFFIT. THE PIPING THEN CONTINUES THROUGH THE SOFFIT, WHICH EXTENDS FROM THE KITCHEN AND ACROSS THE BATHROOM CEILING AND EXITS THE UNIT THROUGH THE OUTSIDE WALL WHERE IT RUNS DOWN THE OUTSIDE OF THE WALL AND CONNECTS TO THE GROUND MOUNTED CONDENSING UNIT. SEE STRUCTURAL SHEET S2 FOR WALL PENETRATION DETAILS.
5	PROVIDE HOODED WALL CAP.
6	INTAKE FOR WHOLE HOUSE PASSIVE VENTILATION SYSTEM: US MODEL PS-101 THRU WALL PASSIVE INTAKE VENTILATION UNIT. INTAKE TO BE LOCATED UNDER UPPER CABINETS, MINIMUM 3' BELOW EXHAUST DISCHARGE VENT FROM MICROWAVE.
7	EXHAUST DISCHARGE FROM EXHAUST FAN THAT IS INTEGRAL TO THE MICROWAVE. EXHAUST CAPACITY SHALL BE 300 CFM AND BE EXHAUSTED DIRECTLY TO THE OUTDOORS. EXHAUST FAN TO HAVE MANUAL SWITCH FOR CONTROL.
8	TIMER SWITCH TO CONTROL BATHROOM EXHAUST FAN. EXHAUST FAN IS A COMPONENT OF WHOLE HOUSE VENTILATION SYSTEM SO A HUMIDITY CONTROL IS NOT REQUIRED.

STATE OF ARIZONA
REFER TO SHEET #1

Apr 03 2026

Review of this document does not authorize or approve any omission or deviation from the applicable standards

F9080-10

REGISTERED PROFESSIONAL ENGINEER (MECHANICAL) CERTIFICATE NO. 35347 JOSEPH G. THOMAS DATE SIGNED 12/8/25 ARIZONA U.S.A.

EXPIRATION DATE: 9/30/27

WCW Engineers, Inc.
760 Creel Drive
Wood Dale, Illinois 60191
Tel. 630/595-8800
Fax 630/595-8818
www.WCWengineers.com

MECHANICAL PLAN

DATE:	REV:	DESCRIPTION:

PROFESSIONAL SEAL:

I HEREBY CERTIFY THAT THESE DRAWINGS HAVE BEEN PREPARED UNDER MY DIRECT SUPERVISION AND THAT TO THE BEST OF MY KNOWLEDGE AND BELIEF COMPLY WITH THE CODES AND ORDIANCES FOR PREFABRICATED DWELLING UNITS.

sevan
DESIGN SOLUTIONS, P.C.

Corporate Office:
3025 Highland Parkway | Suite 850
Downers Grove, IL 60515

Contact Information:
info@sevansolutions.com
www.sevansolutions.com

INTEGRITY | RESPECT | TEAMWORK | EXCELLENCE | CHARITY

SHEET MANAGEMENT	
SHEET FORMAT:	ARCH C
SHEET SCALE:	1:3
CREATED BY:	KD
RELEASE DATE:	12/10/2025

SHEET: M2.0

MODEL: BXB-000009
2 DOOR CASITA
(ARIZONA)

ROOF TYPE: FOAM WEDGE ROOF

BOXABL INC.
5345 EAST NORTH BELT ROAD
NORTH LAS VEGAS, NV 89115, USA
+1(702) 500-9000 HELLO@BOXABL.COM

PROPRIETARY AND CONFIDENTIAL
THE INFORMATION CONTAINED IN THIS DRAWING IS THE SOLE PROPERTY OF BOXABL INC. ANY REPRODUCTION IN PART OR AS A WHOLE WITHOUT THE WRITTEN PERMISSION OF BOXABL INC. IS PROHIBITED.

BOXABL

H:\23333\Dwg Updated - Current\Boxabl BXB-000009\23333_M2.0 BXB-000009 AZ Updated.dwg, M2.0, 12/8/2025 10:38:35 AM, 1:1

FAN COIL UNIT SCHEDULE

DESIG'N.	MFG'R.	MODEL NO.	AIR QUANTITY (CFM)	COOLING					HEATING			ELECTRICAL				COMPRESSOR	TYPE OF MOUNTING	HSPF2	SEER2	BOXABL PART NUMBER
				E.A.T. DB °F/WB °F	L.A.T. DB °F/WB °F	TOTAL CAPACITY (BTU/HR)	REFRIGERANT	REFRIGERANT CHARGE	E.A.T. (°F)	L.A.T. (°F)	TOTAL CAPACITY @ 47°F	VOLTAGE	PHASE (Ø)	MCA	MOCP					
CU-1	LG	KUSAE121A										230	1	10	15	ROTORY INVERTER	ON GRADE			HVC-000019
FCU-1	LG	KNSAE121A	459 MAX.	75.0/62.3	55.0/53.4	11,000	R32	24.7 OZ	60.0	88.2	12,000						WALL HUNG	8.50	18.00	HVC-000003

NOTE: UNITS TO BE MANUFACTURER BY LG OR AN APPROVED EQUIVALENT UNIT.

Residential Space-Cooling systems Pipe Insulation (thickness in inches) (Refrigerant)

Fluid Operating Temperature Range °F	Insulation Conduct. (Btu-in/h-ft^2-°F)	Insulation Mean Rating Temperature (°F)	Pipe Diameter < 1"	REMARKS
40-60	0.21-0.27	75	0.75	

Note: Insulation used for refrigerant suction lines outside of a conditioned space, must include a Class I or Class II vapor retarded. The vapor retarded and insulation must be protected from physical damage, UV deterioration and moister with a covering that can be removed for equipment maintenance without destroying the insulation.

EXHAUST FAN SCHEDULE

DESIG'N	SERVICE	MFG'R	MODEL NO.	TYPE	CFM	STATIC PRESSURE ("W.C.)	DRIVE	ELECTRICAL			BACKDRAFT DAMPER	OPER. WEIGHT (LBS.)	EFFICIENCY RATING CFM/WATT	REMARKS
								H.P. (WATTS)	PHASE (Ø)	VOLTAGE				
EF-1	RESTROOM	DELTA	SLM 70	WALL	70	0.250	DIRECT	(11.5)	1	115	GRAVITY	8	5.8	

NOTE: UNITS TO BE MANUFACTURED BY ADDVENT, DELTA, OR AN APPROVED EQUIVALENT UNIT.

THRU-WALL PASSIVE INTAKE VENTILATION UNIT

DESIG'N	MANUFACTURER MODEL NO.	CASING MATERIAL	INTAKE DUCT SIZE
IVU-1	VENTS-US PS-101	ABS PLASTIC	4"Ø

NOTE: UNIT TO BE MANUFACTURED BY VENTS-US OR AN APPROVED EQUIVALENT UNIT.

MUZ-WR09NA MUZ-WR12NA

Unit: Inch (mm)

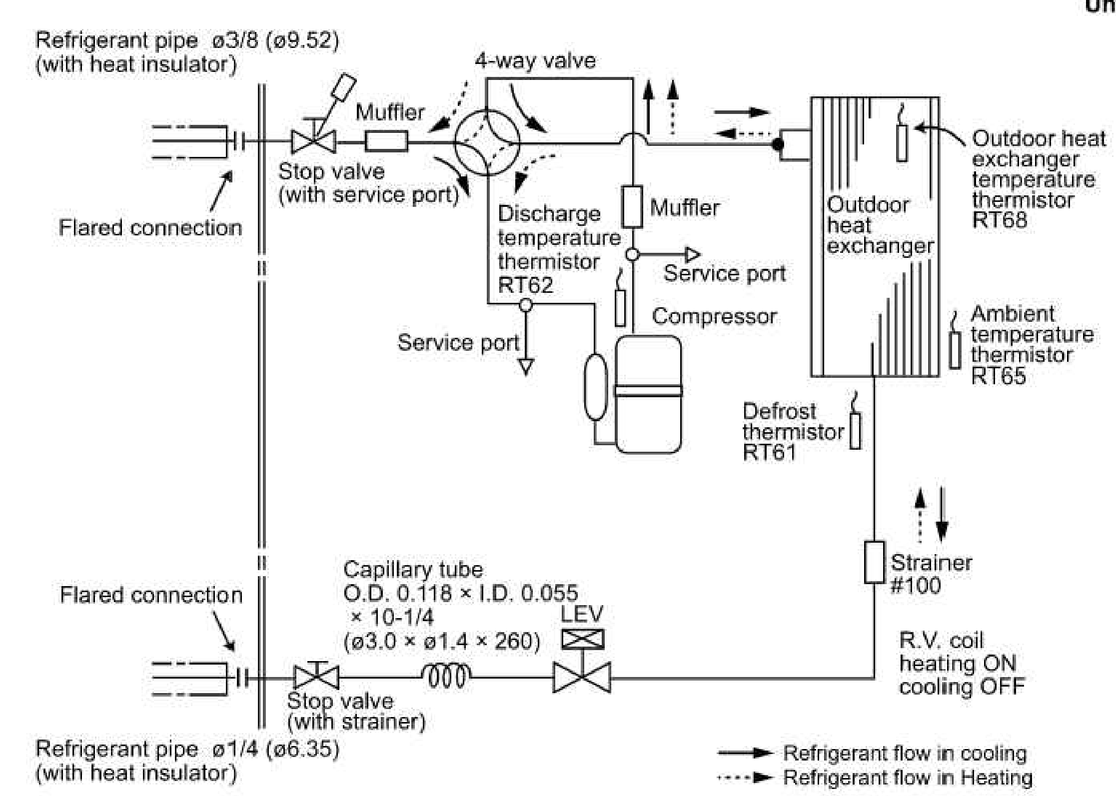

REFRIGERATION PIPING SYSTEM SCHEMATIC DETAIL

NOT TO SCALE

STATE OF ARIZONA
REFER TO SHEET #1

Apr 03 2026

Review of this document does not authorize or approve any omission or deviation from the applicable standards

F9080-10

REGISTERED PROFESSIONAL ENGINEER (MECHANICAL) CERTIFICATE NO. 35347 JOSEPH G. THOMAS DATE SIGNED 8/19/25 ARIZONA, U.S.A.

EXPIRATION DATE: 9/30/27

WCW Engineers, Inc. 760 Creel Drive Wood Dale, Illinois 60191 Tel. 630/595-8800 Fax 630/595-8818 www.WCWengineers.com

MECHANICAL DETAILS

DATE:	REV:	DESCRIPTION:
8-17-23	1	PLAN REVIEW COMMENTS
9-13-23	2	OWNER CLARIFICATIONS
10-6-23	3	PLAN REVIEW COMMENTS
8-19-23	4	CLIENT REVISIONS

PROFESSIONAL SEAL:

I HEREBY CERTIFY THAT THESE DRAWINGS HAVE BEEN PREPARED UNDER MY DIRECT SUPERVISION AND THAT TO THE BEST OF MY KNOWLEDGE AND BELIEF COMPLY WITH THE CODES AND ORDIANCES FOR PREFABRICATED DWELLING UNITS.

sevan
DESIGN SOLUTIONS, P.C.

Corporate Office:
3025 Highland Parkway | Suite 850
Downers Grove, IL 60515

Contact Information:
info@sevan.com
www.sevan.com

INTEGRITY | RESPECT | TEAMWORK | EXCELLENCE | CHARITY

SHEET MANAGEMENT

SHEET FORMAT:	ARCH C
SHEET SCALE:	1:3
CREATED BY:	MT
RELEASE DATE:	6/9/2023

MODEL: 2 DOOR CASITA (ARIZONA)

MODEL #: BXB-00009

SHEET: M3.0

BOXABL INC.
5345 EAST NORTH BELT ROAD
NORTH LAS VEGAS, NV 89115, USA
+1(702) 500-9000 HELLO@BOXABL.COM

PROPRIETARY AND CONFIDENTIAL
THE INFORMATION CONTAINED IN THIS DRAWING IS THE SOLE PROPERTY OF BOXABL INC. ANY REPRODUCTION IN PART OR AS A WHOLE WITHOUT THE WRITTEN PERMISSION OF BOXABL INC. IS PROHIBITED.

BOXABL

H:\23333\Dwg-Updated Original\Boxabl BXB-000009\23333_M3.0 BXB-000009 AZ Updated.dwg, M3.0, 12/8/2025 10:40:06 AM, 1:1

ELECTRICAL SPECIFICATIONS:

E1. A QUALIFIED ELECTRICIAN SHALL FURNISH AND INSTALL ALL LABOR, TOOLS, MATERIAL, EQUIPMENT, SERVICES, AND RELATED ACCESSORIES NECESSARY FOR THE COMPLETE INSTALLATION OF ELECTRICAL WORK SHOWN ON THE DRAWINGS, SPECIFIED IN THE NOTES, AND REQUIRED BY LOCAL CODE AUTHORITIES.

E2. ALL WORK SHALL COMPLY WITH THE 2017 NEC AND 2018 INTERNATIONAL RESIDENTIAL CODE.

E3. OBTAIN AND PAY FOR ALL PERMITS AND FEES RELATING TO ELECTRICAL SYSTEM.

E4. IT IS INTENDED THAT ALL ITEMS OF WORK AND SYSTEMS BE COMPLETE AND WIRED COMPLETE IN ALL DETAILS, READY FOR SATISFACTORY OPERATION AND SERVICE. APPARATUS REQUIRED SHALL BE FURNISHED, EVEN THOUGH NOT SPECIFICALLY MENTIONED HEREIN, OR SHOWN ON THE DRAWINGS.

E5. PROVIDE GROUNDING OF ELECTRICAL WORK IN STRICT ACCORDANCE WITH THE APPLICABLE CODES AND THEIR AUTHORITIES.

E6. COORDINATE ALL WORK WITH OTHER TRADES PRIOR TO ANY INSTALLATION.

E7. PROVIDE CODE APPROVED CLEARANCES AROUND ELECTRICAL EQUIPMENT.

E8. MATERIALS AND EQUIPMENT SHALL BE NEW AND SHALL CONFORM TO THE NEMA STANDARDS, NATIONAL ELECTRICAL CODE (NEC) IN EVERY CASE, WHERE SUCH STANDARDS HAVE BEEN ESTABLISHED. ALL ELECTRICAL MATERIALS, DEVICES, APPLIANCES, FITTINGS AND OTHER EQUIPMENT SHALL BE LISTED AND LABELED BY A QUALIFIED TESTING AGENCY AND SHALL BE CONNECTED IN AN APPROVED MANNER WHEN INSTALLED.

E9. TESTING - AFTER WIRES ARE IN PLACE AND CONNECTED TO DEVICES AND EQUIPMENT, THE SYSTEM SHALL BE TESTED FOR SHORTS AND GROUNDS. ALL HOT WIRES, IF SHORTED OR GROUNDED, SHALL BE REMOVED AND REPLACED.

E10. ALL METERS, INSTRUMENTS, CABLE CONNECTION, EQUIPMENT, OR APPARATUS NECESSARY FOR MAKING ALL TESTS, SHALL BE FURNISHED BY THIS CONTRACTOR AT HIS OWN EXPENSE.

E11. AFTER THE COMPLETION OF THE INSTALLATION, THE ENTIRE SYSTEM SHALL BE THOROUGHLY CLEANED. CLEAN ALL FOREIGN MATTER, PAINT, OIL, DIRT, UNREQUIRED LABELS, GREASE, AND STICKERS FROM FIXTURES AND EQUIPMENT. REMOVE FROM THE PREMISES ALL RUBBISH, DEBRIS, ETC. ACCUMULATED BY THE ELECTRICAL INSTALLATION.

E12. THE CONTRACTOR SHALL BE RESPONSIBLE FOR PROTECTING ALL EQUIPMENT AND SYSTEMS AGAINST HARMFUL EXPOSURE, OR ACCUMULATION OF DUST/MOISTURE, FLOODING, CORROSION, OR OTHER FORMS OF DAMAGE. CLEAN AND RESTORE DAMAGED FINISHES AND EQUIPMENT TO PLACE INSTALLATION IN A LIKE-NEW CONDITION.

E13. UNLESS SPECIFICALLY NOTED OTHERWISE, ALL INTERIOR WIRING SHALL BE NM-B CABLE. ELECTRICIAN SHALL PROVIDE EXTENSION OF ALL CABLE FROM JUNCTION BOX TO ELECTRICAL PANEL. PROVIDE CODE COMPLIANT RACEWAY AND WIRING FROM INTERIOR JUNCTION BOX TO EXTERIOR PANEL. SEAL OPENING WEATHERTIGHT. PROVIDE INTERCONNECTION OF CABLES BETWEEN THE WALLS AND ROOF PANELS. THERE MAY BE SEVERAL CIRCUITS IN EACH PANEL. EACH IS LABELED WITH CIRCUIT NAME, CONNECT CIRCUITS OF LIKE NAMES.

E14. DISCONNECT SWITCHES SHALL BE QUICK-MAKE, QUICK-BREAK TYPE IN NEMA ENCLOSURE TO MATCH LOCATION AND USE. SWITCHES SHALL BE LISTED FOR THEIR USE.

E15. PANEL/LOAD CENTER SHALL BE AS SHOWN ON THE DRAWINGS WITH 100A-2P MAIN BREAKER AND BRANCH BREAKERS AS SCHEDULED. UNIT IS PROVIDED IN A NEMA 3R ENCLOSURE FOR EXTERIOR MOUNTING. INSTALL IN ACCORDANCE WITH MANUFACTURER'S INSTRUCTIONS. INSTALL BREAKERS AS REQUIRED. PANEL/LOAD CENTERS SHALL BE SQUARE D QO SEREIS WITH QO BREAKERS OR EATON, SEIMENS OR GENERAL ELECTRIC EQUIVALENT. TERMINATE ALL CABLING AND WIRING AT PANEL/LOAD CENTER IN ACCORDANCE WITH NEC REQUIREMENTS.

E16. INSTALL COMBINATION WASHER/DRYER BACKBOX WIRING AND PLUG IN WALL.

E17. ASSEMBLE AND INSTALL PENDANT LIGHT FURNISHED WITH UNIT. PENDANT LIGHT SHALL BE LISTED PER 410.10(D).

E18. INSTALL SMOKE DETECTOR FURNISHED WITH UNIT.

E19. ASSEMBLE AND INSTALL EXTERIOR SCONCE LIGHT FURNISHED WITH UNIT BY EACH EXTERIOR DOOR. SEAL LIGHT TO EXTERIOR WALL TO BE WEATHER TIGHT.

E20. ALL EQUIPMENT LOCATED OUTDOORS SHALL BE WEATHERPROOF TYPE.

E21. FURNISH AND INSTALL A COMPLETE AND OPERABLE SYSTEM OF SERVICE AND DISTRIBUTION FROM THE UTILITY COMPANY TRANSFORMERS OR FROM FEED FROM ANOTHER STRUCTURE TO THE PANEL/LOAD CENTER AS REQUIRED. PROVIDE A 120/240V., 1PH., 3W. SERVICE OR FEEDER TO THE LOAD CENTER RATED AT 100 AMPERES. MINIMUM FEEDER SIZE TO THE HOUSE SHALL BE 3 # 1 AWG COPPER CONDUCTORS. COORDINATE FINAL GROUNDING WITH METHOD OF FEEDING. SUGGESTED SERVICE GROUNDING DETAIL IS FOR UTILITY FED BUILDING.

E22. TWO SMALL APPLIANCE 20A BRANCH CIRCUITS HAVE BEEN PROVIDED PER NEC 210.11 (C)(1) SERVING ONLY ABOVE COUNTER RECEPTACLES.

E23. LAUNDRY AREA 20A BRANCH CIRCUITS HAS BEEN PROVIDED PER NEC 210.11 (C)(2) SERVING ONLY LAUNDRY AREA.

E24. INDIVIDUAL APPLIANCE BRANCH CIRCUITS HAVE BEEN PROVIDED SERVING DEDICATED APPLIANCES INCLUDING HEAT A/C UNIT, REFRIGERATOR, MICROWAVE AND ELECTRIC RANGE.

E25. BATHROOM RECEPTACLE 20A BRANCH CIRCUIT HAS BEEN PROVIDED PER NEC 210.11 (C)(3) SERVING ONLY BATHROOM RECEPTACLES.

E26. RECEPTACLE OUTLETS HAVE BEEN INSTALLED IN ACCORDANCE WITH NEC 210.52. ALL RECEPTACLES SHALL BE LISTED AND GROUNDED TYPE AND INSTALLED IN ACCORDANCE WITH NEC 406.4. ALL RECEPTACLES SHALL BE PROVIDED WITH AFCI PROTECTION. ALL 15A AND 20A KITCHEN, BATHROOM, LAUNDRY, AND OUTDOOR RECEPTACLES SHALL BE GFCI TYPE. ALL OUTDOOR RECEPTACLES SHALL BE WEATHER RESISTANT TYPE WITH WEATHERPROOF COVERS AND WEATHER SEALED TO BUILDING FRAME

E27. PROVIDE GROUNDING AND BONDING SHALL BE PROVIDED PER NEC 250.

E28. FITTINGS AND CONNECTORS THAT ARE INTENDED TO BE CONCEALED AT THE TIME OF ASSEMBLY SHALL BE LISTED AND IDENTIFIED FOR THE INTERCONNECTION OF BUILDING COMPONENTS. SUCH FITTING SHALL BE EQUAL TO THE WIRING METHOD EMPLOYED IN INSULATION, TEMPERATURE RISE, AND FAULT-CURRENT WITHSTANDING AND SHALL BE CAPABLE OF ENDURING THE VIBRATION AND SHOCK OCCURRING IN TRANSPORT.

E29. GROUNDING OF BOTH ELECTRICAL AND NON ELECTRICAL METAL PARTS SHALL BE THROUGH CONNECTION TO A GROUNDING BUS IN THE PANEL/LOAD CENTER AND SHALL BE CONNECTED THROUGH THE GREEN-COLORED INSULATED CONDUCTOR IN THE FEEDER WIRING TO THE GROUNDING BUS IN THE SERVICE ENTRANCE EQUIPMENT.

E30. THE INSTALLATION OF THE SERVICE EQUIPMENT SHALL COMPLY WITH ARTICLE 230. MEANS SHALL BE PROVIDED FOR THE CONNECTION OF A GROUNDING ELECTRODE CONDUCTOR TO THE SERVICE EQUIPMENT AND ROUTING IT OUTSIDE THE STRUCTURE. BONDING AND GROUNDING OF THE SERVICE SHALL BE IN ACCORDANCE WITH ARTICLE 250. THE MANUFACTURER SHALL INCLUDE IN ITS WRITTEN INSTALLATION INSTRUCTIONS ONE METHOD OF GROUNDING THE SERVICE EQUIPMENT AT THE INSTALLATION SITE. THE INSTRUCTIONS SHALL CLEARLY STATE THAT OTHER METHODS OF GROUNDING ARE FOUND IN ARTICLE 250.
THE MINIMUM SIZE GROUNDING ELECTRODE CONDUCTOR SHALL BE # 8 AWG COPPER.

A WARNING LABEL SHALL BE MOUNTED ON OR ADJACENT TO THE SERVICE EQUIPMENT. THE LABEL SHALL STATE THE FOLLOWING:
"WARNING DO NOT PROVIDE ELECTRICAL POWER UNTIL THE GROUNDING ELECTRODE(S) IS INSTALLED AND CONNECTED (SEE INSTALLATION INSTRUCTIONS)."

SYMBOL LIST

SYMBOL	DESCRIPTION
(J), (J)	JUNCTION BOX - WALL OR CEILING MOUNTED
	NON - FUSED DISCONNECT SWITCH
	FUSED DISCONNECT SWITCH
	MOTOR CONNECTION - H.P. AS NOTED ON DRAWINGS
	NM-B CABLE RUN CONCEALED IN CEILING OR WALLS. X DENOTES GROUND WIRE DENOTES NEUTRAL CONDUCTOR DENOTES HOT CONDUCTOR
	LOAD CENTER
	DUPLEX RECEPTACLE (NEMA 5-20R) (+18" AFF UNLESS NOTED OTHERWISE)
	DUPLEX RECEPTACLE (NEMA 5-20R) (MOUNTED 6" ABOVE COUNTER TOP UNLESS NOTED OTHERWISE)
	DUPLEX CONVENIENCE OUTLET (NEMA 5-15R)
	SPECIAL OUTLET. REFER TO POWER PLAN ON SHEET E1.0 FOR REQUIREMENTS
	SINGLE NEMA 5-20R RECEPTACLE
SD	CEILING MOUNTED COMINATION SMOKE/FIRE/CARBON MONOXIDE ALARM - USI ELECTRIC # MUC1509S HARDWIRED ALARM WITH 10 YEAR SEALED BATTERY OR EQUAL.
A.	DENOTES AMPERES
A.C.	DENOTES ABOVE COUNTER
A.F.F.	DENOTES ABOVE FINISHED FLOOR
AFGCI	DENOTES COMBINATION ARC FAULT GROUND FAULT CIRCUIT INTERRUPTER TYPE BREAKER
C.	DENOTES CONDUIT
GFCI	DENOTES GROUND FAULT CIRCUIT INTERRUPTER
GRD.	DENOTES GROUND
M.L.O.	DENOTES MAIN LUGS ONLY
WP	DENOTES WEATHERPROOF (NEMA 3R)

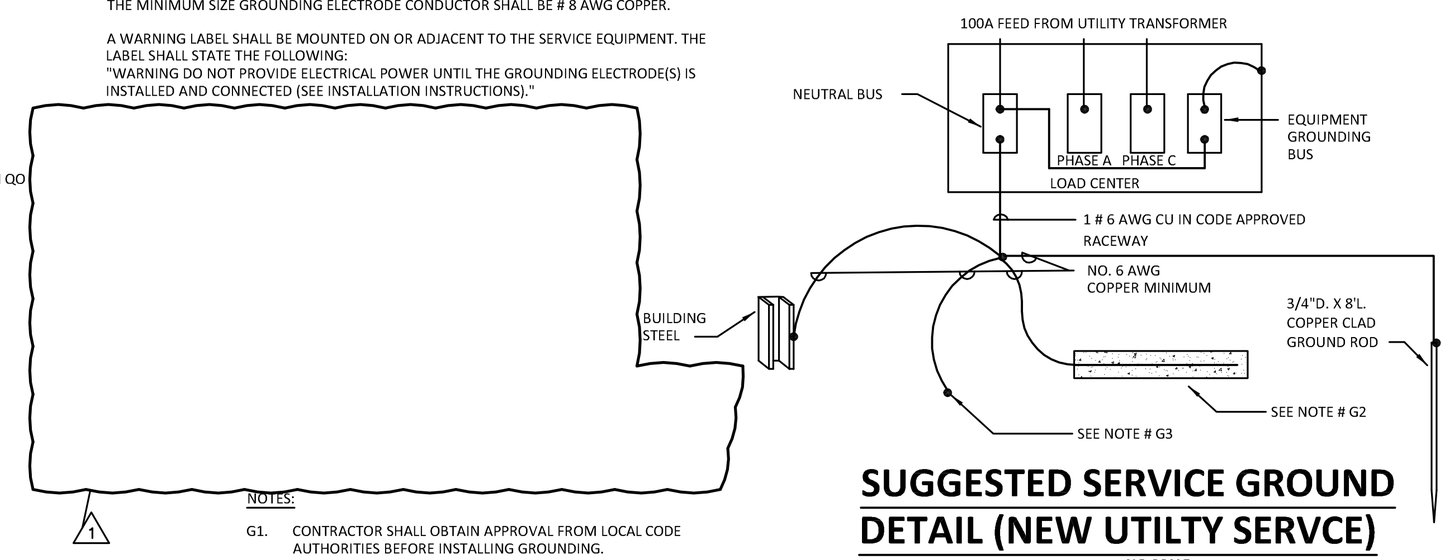

SUGGESTED SERVICE GROUND DETAIL (NEW UTILTY SERVCE)

NO SCALE

NOTES:

G1. CONTRACTOR SHALL OBTAIN APPROVAL FROM LOCAL CODE AUTHORITIES BEFORE INSTALLING GROUNDING.

G2. CONCRETE ENCASED ELECTRODE ENCASED BY A MINIMUM OF 2" OF CONCRETE ON ALL SIDES LOCATED WITHIN AND NEAR THE BOTTOM OF A CONCRETE FOOTING OR FOUNDATION. ELECTRODE SHALL CONSIST OF A MINIMUM OF 20' OF BARE COPPER CONDUCTOR (# 4) WHERE APPLICABLE. (SEE NEC 250.52 (A) (3) (2))

G3. BOND TO REBAR STUBOUT IN FOUNDATION PER NEC 250 WHERE APPLICABLE (SEE NEC 250.52 (A) (3) (1))

STATE OF ARIZONA REFER TO SHEET #1

Apr 03 2026

Review of this document does not authorize or approve any omission or deviation from the applicable standards

F9080-10

DATE:	REV:	DESCRIPTION:
03-13-25	1	PLAN REVIEW COMMENTS

PROFESSIONAL SEAL: Registered Professional Engineer (Electrical) CERTIFICATE NO. 61810 GREGORY L. DOFFIN Date Signed ARIZONA, U.S.A.

SIGNATURE

03/13/2026 DATE

06/30/2028 EXPIRATION DATE

sevan DESIGN SOLUTIONS, P.C.

Corporate Office: 3025 Highland Parkway | Suite 850 Downers Grove, IL 60515

Contact Information: info@sevansolutions.com www.sevansolutions.com

INTEGRITY | RESPECT | TEAMWORK | EXCELLENCE | CHARITY

SHEET MANAGEMENT	
SHEET FORMAT:	ARCH C
SHEET SCALE:	1:3
CREATED BY:	KD
RELEASE DATE:	12/10/2025

SHEET: E1.0

MODEL: BXB-000009 2 DOOR CASITA (ARIZONA)

ROOF TYPE: FOAM WEDGE ROOF

BOXABL INC.
5345 EAST NORTH BELT ROAD
NORTH LAS VEGAS, NV 89115, USA
+1(702) 500-9000 HELLO@BOXABL.COM

PROPRIETARY AND CONFIDENTIAL
THE INFORMATION CONTAINED IN THIS DRAWING IS THE SOLE PROPERTY OF BOXABL INC. ANY REPRODUCTION IN PART OR AS A WHOLE WITHOUT THE WRITTEN PERMISSION OF BOXABL INC. IS PROHIBITED.

BOXABL

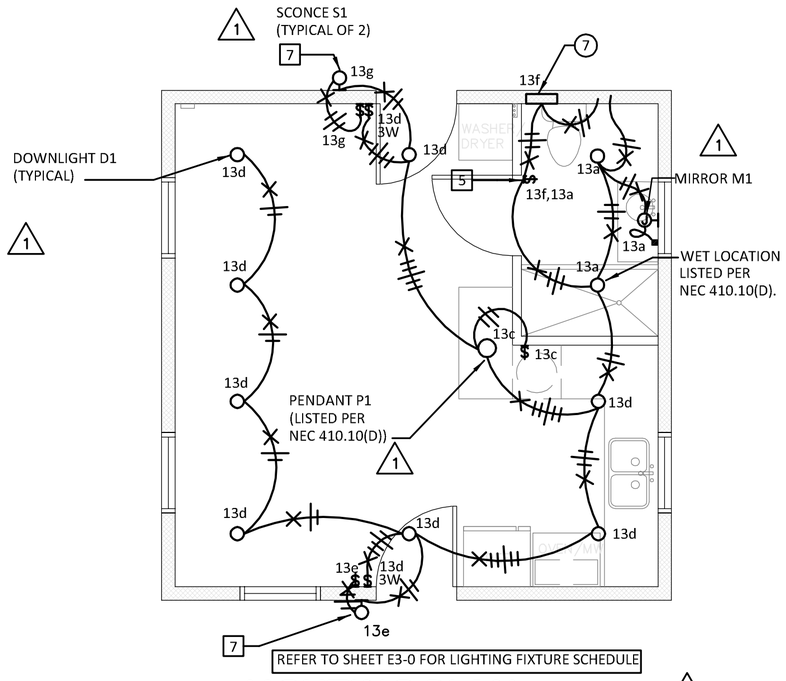

LIGHTING PLAN

SCALE: 1/4"=1'-0"

0' 4' 8' 12' 16'

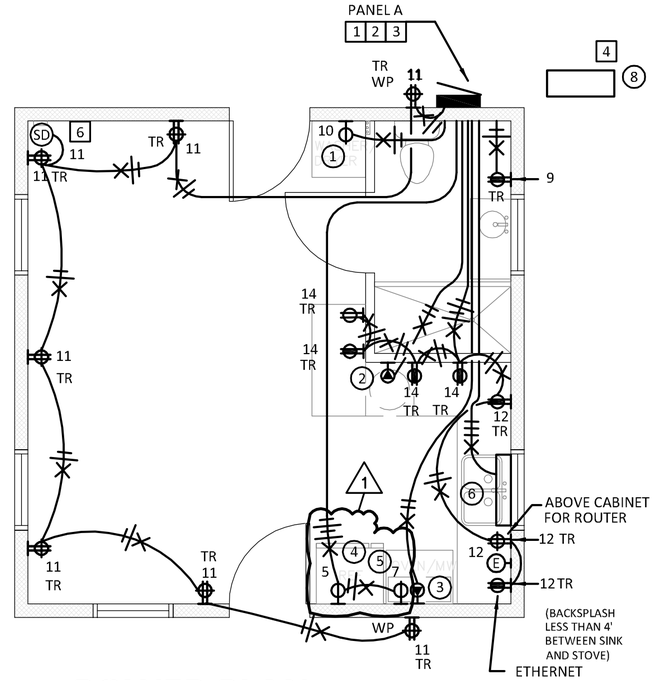

POWER PLAN

SCALE: 1/4"=1'-0"

0' 4' 8' 12' 16'

POWER NOTES:

1. LOAD CENTER FULLY ASSEMBLED AND INSTALLED IN FACTORY WITH EMERGENCY SERVICE/ MAIN SERVICE DISCONNECT AS PART OF LOAD CENTER.
2. ELECTRICIAN TO PROVIDE ELECTRICAL FEEDER/ELECTRICAL SERVICE FROM SITE TO LOAD CENTER.
3. ELECTRICIAN TO PROVIDE SERVICE GROUND/BUILDING GROUND PER NEC REQUIREMENTS.
4. ELECTRICIAN TO WIRE OUTDOOR CONDENSER UNIT EXTEND WIRING AND INTERCONNECT WIRING FROM INDOOR FAN COIL PER MANUFACTURERS DIRECTIONS. COORDINATE INSTALLATION WITH MECHANICAL CONTRACTOR AS TO NOT IMPEDE CODE REQUIRED CLEARANCE FOR ELECTRICAL PANELS/SERVICE DISCONNECTS. PROVIDE GFCI PROTECTION PER 210.8 (F).
5. PROVIDE COMBO BATH FAN/LIGHT SWITCH WITH VENTILATION CONTROL & DELAY TIMER. (LEGRAND RADIANT 4 BUTTON DIGITAL TIMER # RT2BKCCV4 OR EQUAL)
6. COMBINATION SMOKE/FIRE/CARBON MONOXIDE ALARM WITH BATTERY BACKUP. UNIVERSAL SECURITY INSTRUMENTS # MIC1509S HARDWIRED 3 IN 1 SMART ALARM WITH 10 YEAR SEALED BATTERY OR EQUAL. DETECTOR SHALL BE LOCATED MINIMUM OF 20 FEET FROM COOKING APPLIANCE. SHIPPED LOOSE, INSTALLED AND TESTED ONSITE.
7. OUTDOOR WALL LAMP WITH INTEGRAL PHOTOCELL OR WITH ASTRONOMICAL TIMECLOCK (FURNISHED WITH UNIT INSTALLED ON SITE)

CIRCUIT PROTECTION NOTES:

- ARC FAULT CIRCUIT INTERRUPTER PROTECTION SHALL BE PROVIDED FOR ALL 15 AND 20A BRANCH CIRCUITS SUPPLYING OUTLETS AND DEVICES IN ACCORDANCE WITH NEC 210.12(A).
- GROUND FAULT CIRCUIT INTERRUPTER PROTECTION SHALL BE PROVIDED FOR ALL 15A AND 20A RECEPTACLES AND EQUIPMENT IN ACCORDANCE WITH NEC 210.8.
- ALL RECEPTACLES SHOWN WITH TR SHALL BE TAMPER RESISTANT PER NEC 406.12.

STATE OF ARIZONA
REFER TO SHEET #1

Apr 03 2026

Review of this document does not authorize or approve any omission or deviation from the applicable standards

F9080-10

EQUIPMENT SCHEDULE

MARK	EQUIPMENT DESCRIPTION	VOLTAGE	PHASE	AMPS	RECEPTACLE TYPE	CIRCUIT DATA: CIRCUIT NUMBER	CONDUCTORS: QTY.	CONDUCTORS: SIZE	CONDUCTORS: EQ. GND.	HEIGHT	BOXABL PART NUMBER
1	WASHER DRYER	120	1	10.0	5-20R	A-10	2	#12	#12	18" A.F.F.	APP-000013
2	WATER HEATER	240	1	18.75	6-30R	A-(6,8)	2	# 10	#10	18" A.F.F.	APP-000014
3	RANGE	240	1	40.0	14-50R*	A-(2,4)	2	#6	#10	18" A.F.F.	APP-000011
4	REFRIGERATOR	120	1	12	5-20R	A-5	2	#12	#12	18" A.F.F.	APP-000008
5	MICROWAVE	120	1	12	5-20R	A-7	2	#12	#12	84" A.F.F.	APP-000005
6	FAN COIL UNIT FCU-1	240	1	1.0	-	WIRE TO CU-1	3	#14	#14	-	HVC-000003
7	EXHAUST FAN EF-1	120	1	11 WATTS	-	A-13f	2	#12	#12	-	HVC-000052
8	OUTDOOR CONDENSER CU-1	240	1	10.0	-	A-(15,17)	2	#10	#10	-	HVC-000019

*14-50R IS A THREE PHASE RECEPTACLE ONLY TWO PHASES USED. COORDINATE PHASING.

ELECTRICAL CALCULATIONS (NEC)

6-Oct-2023

PROJECT: DELAWARE
JOB NUMBER: 22190
CALCUALTION BY: RPM

Arizona Casita BXB-000009

PANEL DESIGNATION	A								
TOTAL AREA (SQ FT)	361		SERVICE:	120/240V., 1PH., 3W.					
GENERAL LIGHTING LOAD CALC	AREA	361	X			3	WT/SQ FT WT/SQ FT	1083	W GEN. LTG/REC
SMALL APPLIANCE		2	X	1	QTY OF UNITS	X 1500	WATTS	3000	W SM. APP
LAUNDRY		1	X	1	QTY OF UNITS	X 1500	WATTS	1500	W LAUNDRY
					SUBTOTAL			5583	
DEMAND									
1ST 20 KW		AT	100%		5583		=	5,583	
WATER HEATER					4500	X	100% =	4,500	
DISHWASHER					0	X	100% =	0	
MISC					MISC	X	100% =	0	
MISC					0	X	100% =	0	
FAN COIL					240	X	100% =	240	
AC					2400	X	100% =	2,400	
ELECTRIC DRYER					0	X	100% =	0	
ELECTRIC RANGE					9600	X	80% =	7,680	
LARGEST MOTOR					0	X	25% =	0	
TOTAL DEMAND:								20,403	WATTS
VOLTAGE:	240		1	PHASE				20	KW
AMPS:	85.0								
MINIMUM SERVICE SIZE:		85	AMPS						
SERVICE SIZE:		100	AMPS						

PANEL DATA SCHEDULE — PANEL NAME: _A_

LOCATION: OUTDOOR
SERVICE: 120/240V.,1PH.,3W.
MAIN BREAKER: 100A–2P MINIMUM
MAIN LUGS ONLY:
NEUTRAL BUS: 100A MINIMUM
GROUND BUS: YES
SHORT CIRCUIT RATING: 10,000 RMS SYM AMPS

	CONNECTED LOAD	DEMAND LOAD
PHASE A	12.94 KVA	10.62 KVA
PHASE B	12.45 KVA	10.20 KVA
TOTAL	25.39 KVA	20.82 KVA
	106 AMPS	87 AMPS

DEMAND LOAD

KEY:		
L: LIGHTING	0.19	KVA
R: RECEPTACLES	5.63	KVA
M: MOTORS	6.90	KVA
P: PANELS	0.00	KVA
T: TRANSFORMERS	0.00	KVA
E: EQUIPMENT	8.10	KVA
S & X: SPARE & SPACE	0.00	KVA

FLUSH ☐
SURFACE ■

NOTES: NEMA 3R – SERVICE ENTRANCE RATED – MINIMUM OF 3 # 2 AWG SERVICE
* DENOTES LOCK–OUT CLIP: ** DENOTES GFI BREAKER: *** DENOTES VIA TIMECLOCK: **** DENOTES VIA CONTACTOR

CONDUCTOR SIZE	CIRCUIT USE	CONNECTED LOAD A	CONNECTED LOAD B	CCT. NO.	CIRCUIT BREAKER	CIRCUIT BREAKER	CCT. NO.	CONNECTED LOAD A	CONNECTED LOAD B	CIRCUIT USE	CONDUCTOR SIZE
4 # 12 AWG	R: INTEGRAL WHOLE BUILDING	0		1	20A–2P	50A–2P	2	4,800		E: RANGE	2 # 6, 1 # 10 AWG
	R: SURGE PROTECTION DEVICE		0	3	SPD		4		4,800	E:	
3 # 12 AWG	R: REFRIGERATOR	1,440		5	20A–1P AFGCI	30A–2P	6	2,250		M: WATER HEATER	2 # 8, 1 # 10 AWG
3 # 12 AWG	R: MICROWAVE		1,440	7	20A–1P AFGCI		8		2,250	M:	
3 # 12 AWG	R: BATHROOM RECEPTACLE	360		9	20A–1P AFGCI	20A–1P AFGCI	10	1,200		E: WASHER/DRYER	3 # 12 AWG
3 # 12 AWG	R: LIVING ROOM/EXTERIOR RECEPTS.		1,260	11	20A–1P AFGCI	20A–1P AFGCI	12		1,500	R: ROUTER/KITCHEN SMALL APPL.	3 # 12 AWG
3 # 14 AWG	L: BATH/KITCHEN/LIVING ROOM LTS	192		13	15A–1P AFCI	20A–1P AFGCI	14	1,500		R: DINING/KITCHEN SMALL APPL.	3 # 12 AWG
3 # 10 AWG	M: CU–1/FCU–1		1,200	15	15A–2P GFI	BLANKSPACE	16		0	X: BLANKSPACE	
	M:	1,200		17		BLANKSPACE	18	0		X: BLANKSPACE	
	X: BLANKSPACE		0	19	BLANKSPACE	BLANKSPACE	20		0	X: BLANKSPACE	
	SUB TOTAL	3,192	3,900					9,750	8,550	SUB TOTAL	

DATE:	REV:	DESCRIPTION:
03-13-25	1	PLAN REVIEW COMMENTS

PROFESSIONAL SEAL: Registered Professional Engineer (Electrical) CERTIFICATE NO. 61810 GREGORY L. DOFFIN Date Signed ARIZONA, U.S.A.
SIGNATURE
03/13/2026 06/30/2028
DATE EXPIRATION DATE

sevan DESIGN SOLUTIONS, P.C.

Corporate Office: 3025 Highland Parkway | Suite 850 Downers Grove, IL 60515
Contact Information: info@sevansolutions.com www.sevansolutions.com

INTEGRITY | RESPECT | TEAMWORK | EXCELLENCE | CHARITY

SHEET MANAGEMENT	
SHEET FORMAT:	ARCH C
SHEET SCALE:	1:3
CREATED BY:	KD
RELEASE DATE:	12/10/2025
SHEET:	E2.0

MODEL: BXB-000009 2 DOOR CASITA (ARIZONA)

ROOF TYPE: FOAM WEDGE ROOF

BOXABL INC.
5345 EAST NORTH BELT ROAD
NORTH LAS VEGAS, NV 89115, USA
+1(702) 500-9000 HELLO@BOXABL.COM

PROPRIETARY AND CONFIDENTIAL
THE INFORMATION CONTAINED IN THIS DRAWING IS THE SOLE PROPERTY OF BOXABL INC. ANY REPRODUCTION IN PART OR AS A WHOLE WITHOUT THE WRITTEN PERMISSION OF BOXABL INC. IS PROHIBITED.

BOXABL

Lighting Schedule

Tag	Number	Product Type	Manufacturer	Model No	Wattage	Color Temperature	Mounting Details	Color	Notes
S1	2	Exterior Sconce Light	CLEANLIFE	CL-LED-120-BXCODS-WHE26-01 (P)	60W MAX (Customer Supplied Bulb)	N/A	Wall Mount	White	
P1	1	Pendant Light	CLEANLIFE	CL-LED-BXCP-WH38-01	9W	4000K	Ceiling or Wall Mount	White	
D1	10	4" LED Downlight	CLEANLIFE	CL-LED-TDL04-2750-WH	8W	3500K	Ceiling Clip-in	White	
M1	1	LED MIRROR	CLEANLIFE	CL-TGM-120-48-T-N-35-1D-2L-P-28X36-01	60W	3500K	Wall Cleat	N/A	SGCC Tempered

1

Electrical Equipment Schedule

Product Type	Description	Manufacturer	Model No
Panel	100A Exterior Panel	SIEMENS	SNW2020B1100
Breaker	15A AFCI BREAKER	SIEMENS	QA115AFCN
Breaker	20A DUAL FUNCTION BREAKER	SIEMENS	QA120AFCN
Breaker	15A-2P GFCI BREAKER	SIEMENS	Q215GF
Breaker	30A-2P BREAKER	SIEMENS	Q230
Breaker	50A-2P BREAKER	SIEMENS	Q250
Surge Protection	20A Whole House Surge Protection Device	SIEMENS	QSA2020SPD
Padlocking Device	2-Pole Padlocking Device	SIEMENS	ECPLD2

STATE OF ARIZONA
REFER TO SHEET #1

Apr 03 2026

Review of this document does not authorize or approve any omission or deviation from the applicable standards

F9080-10

DATE:	REV:	DESCRIPTION:
03-13-25	1	PLAN REVIEW COMMENTS

PROFESSIONAL SEAL:

Registered Professional Engineer (Electrical)
CERTIFICATE NO
61810
GREGORY L.
DOFFIN
Date Signed
ARIZONA, U.S.A.

SIGNATURE

03/13/2026 — DATE
06/30/2028 — EXPIRATION DATE

sevan
DESIGN SOLUTIONS, P.C.

Corporate Office:
3025 Highland Parkway | Suite 850
Downers Grove, IL 60515

Contact Information:
info@sevansolutions.com
www.sevansolutions.com

INTEGRITY | RESPECT | TEAMWORK | EXCELLENCE | CHARITY

SHEET MANAGEMENT
SHEET FORMAT: ARCH C
SHEET SCALE: 1:3
CREATED BY: KD
RELEASE DATE: 12/10/2025
SHEET: E3.0

MODEL: BXB-000009
2 DOOR CASITA
(ARIZONA)

ROOF TYPE: FOAM WEDGE ROOF

BOXABL INC.
5345 EAST NORTH BELT ROAD
NORTH LAS VEGAS, NV 89115, USA
+1(702) 500-9000 HELLO@BOXABL.COM

PROPRIETARY AND CONFIDENTIAL
THE INFORMATION CONTAINED IN THIS DRAWING IS THE SOLE PROPERTY OF BOXABL INC. ANY REPRODUCTION IN PART OR AS A WHOLE WITHOUT THE WRITTEN PERMISSION OF BOXABL INC. IS PROHIBITED.

BOXABL

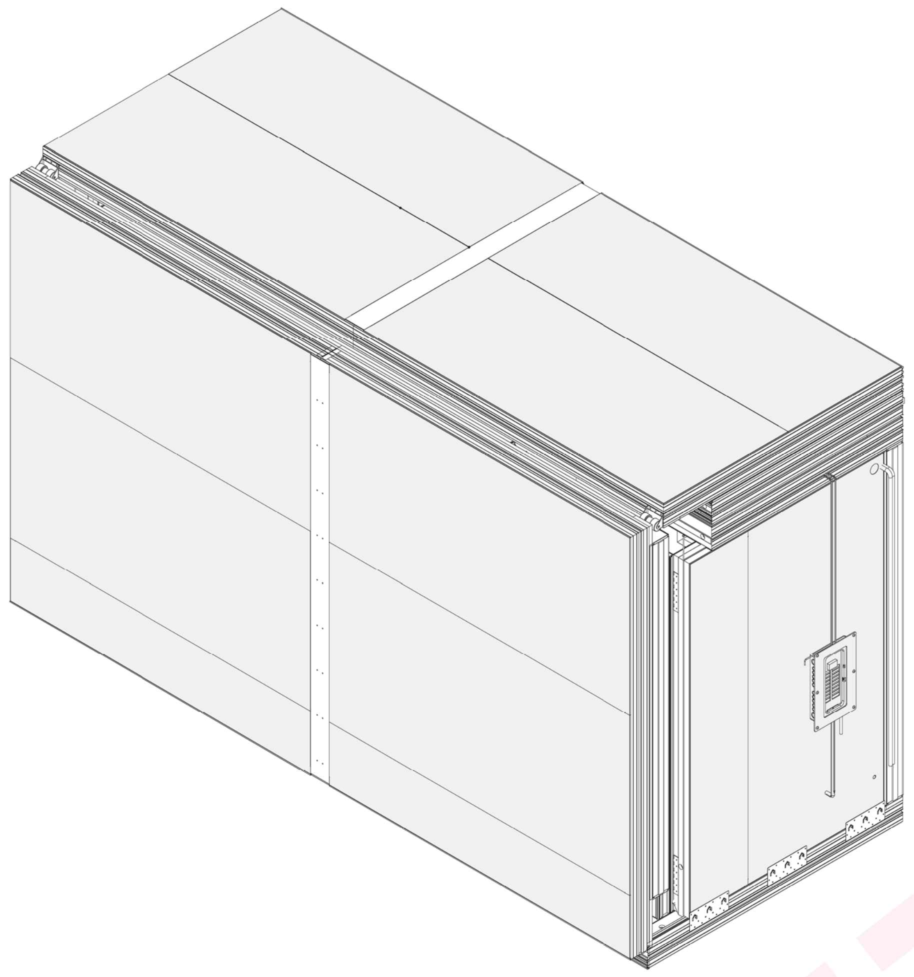

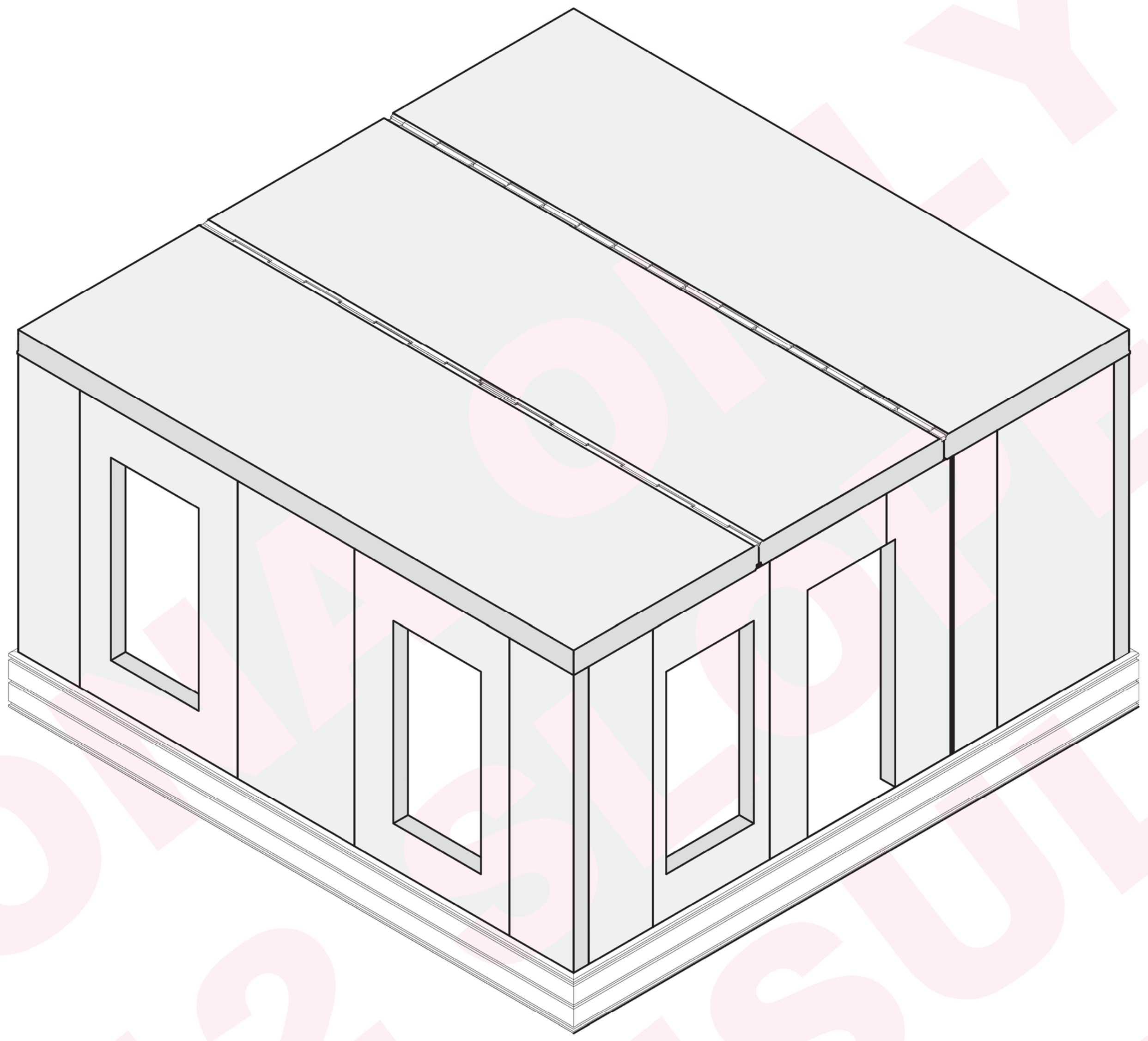

ARIZONA DEPT. OF HOUSING FACTORY-BUILT BUILDING PERMIT SUBMITTAL DRAWINGS

STRUCTURAL

2-Door Studio Casita

Model # BXB-000009

STATEMENT OF SPECIAL INSPECTIONS:

THE OWNER OR OWNER'S REPRESENTATIVE SHALL HIRE A SPECIAL INSPECTOR, APPROVED BY THE AUTHORITY HAVING JURISDICTION, TO PERFORM PERIODIC INSPECTION OF THE INSTALLATION OF THE TITEN HD ANCHORS SPECIFIED ON DETAIL A / S3. INSPECTION TO INCLUDE VERIFICATION OF THE ANCHOR TYPE, ANCHOR DIMENSIONS, HOLE CLEANING PROCEDURE, CONCRETE TYPE, COMPRESSIVE STRENGTH, HOLE DIMENSION, ANCHOR SPACING, EDGE DISTANCE, INSTALLATION TORQUE, MAXIUMUM IMPACT WRENCH TORQUE RATING AND ADHERENCE TO SIMPSON'S PUBLISHED INSTALLATION INSTRUCTIONS.

SPECIAL INSPECTION AND QUALITY CONTROL/ASSURANCE REQ'TS OF THE STEEL BEAM, HINGE AND HINGE WELDING, FOUND IN THE BOXABL QUALITY CONTROL MANUAL, TO BE BASED ON THE REQ'TS OF IBC SECTION 1704 AND 1705.2.1 AND MODELED ON THE RELEVENT REQ'TS OF AISC 360-22 CHAPTER N. ALTERNATIVELY, (OR IN ADDITION) DESTRUCTIVE TESTING, OBSERVED BY AN INDEPENDENT, 3rd PARTY INSPECTOR, SHALL OCCUR AT REGULAR, ADJUSTABLE INTERVALS AS DETERMINED BY THE ENGINEER AND/OR THE ARIZONA DEPT. OF HOUSING ADDITIONAL SPECIAL INSPECTIONS WITH RESPECT TO IBC SECTION 1705.1.1 TO BE AT THE DISCRETION OF THE ARIZONA DEPT. OF HOUSING.

FOUNDATIONS :

FOUNDATIONS SHOULD NOT BE LOCATED IN AREAS WHERE SOIL IS SUBJECT TO CORROSION, EXPANSION, LIQUIFACTION OR COLLAPSE. SOIL SUITABILITY TO BE DETERMINED BY A GEOTECHNICAL REPORT ARRANGED BY & PAID FOR BY OTHERS.

THE FOUNDATION DESIGN SHOWN ON S3 IS INTENDED FOR LEVEL GROUND, EXTENDING AT LEAST 6 FT AWAY FROM THE PERIMETER. FOR SLOPED GRADE CONDITIONS, FLOOD CONDITIONS, OR FOR OTHER FOUNDATION TYPES, CONTACT BOXABL OR THE ENGINEER BELOW.

MAXIMUM (UNLESS NOTED OTHERWISE) ALLOWED WIND, SNOW & SEISMIC VALUES	
WIND EXPOSURE	C
WIND SPEED	115 mph (ULT.) 89 mph (NOM.)
K_{zt} PER ASCE 7-16 Section 26.8	1.00
ROOF SNOW LOAD, P_f PER ASCE 7-16 Section 7.3	23 psf
ROOF SNOW LOAD, P_g PER ASCE 7-16 Section 7.3	33 psf
SEISMIC CATEGORY	D
minimum Fa	1.2
S_1	.75
S_{DS}	.99 *
S_{D1}	.75
S_S	1.23 *

* VALUE BASED ON HIGHEST VALUE FOUND THROUGH SPOT CHECKING USING THE ASCEHAZARDTOOL.

DESIGN CRITERIA

CODE: 2018 IBC

STATE OF ARIZONA
REFER TO SHEET #1
Apr 03 2026
Review of this document does not authorize or approve any omission or deviation from the applicable standards
F9080-10

APPLIED LOADS

ROOF LIVE LOAD : 20 psf

SNOW LOAD : SEE TABLE AT LEFT

ROOF DEAD LOAD :

SIP ROOF: 4 psf + 3 psf ALLOTTED FOR SITE INSTALLED EPDM.
SOLAR PANEL SYSTEM: 5 psf MAXIMUM ALLOWED

FLOOR LIVE LOAD : 40 psf

FLOOR DEAD LOAD: 5 psf

BASIC WIND SPEED : SEE LIMITS IN TABLE AT LEFT.

SEISMIC FACTORS:

I = 1 SEE TABLE AT LEFT FOR ADD'L SEISMIC INFO.

SITE CLASS = D - DEFAULT

BASIC SEISMIC FORCE RESISTING SYSTEM
= LIGHT-FRAMED WALLS w/ SHEAR PANELS OF MGO & STEEL

R = 6.5 PER ICC-ESR #4725

ANALYSIS PROCEDURE:
EQUIV. LATERAL FORCE

BASE SHEAR =1,850 lb (ASSUMING 5 psf STUCCO IS USED)

THESE DRAWINGS REPRESENT THE UNDERSTANDING OF SIP ENGINERING CONSULTANTS, LLC REGARDING THE CONSTRUCTION DETAILS USED BY BOXABL, INC. IN THEIR FACTORY. IF DISCREPANCIES ARE DISCOVERED BETWEEN THESE DRAWINGS AND ACTUAL CONSTRUCTION, THE ENGINEER SHALL BE PROMPTLY NOTIFIED SO THAT HE MAY HAVE THE OPPORTUNITY TO REVISE THE DRAWINGS AND ENGINEERING, IF REQUIRED. FAILURE TO PROMPTLY NOTIFY THE ENGINEER OF SUCH DISCREPANCIES, SHALL ABSOLVE THE ENGINEER FROM ANY RESPONSIBILITY OF SUCH FAILURE. ACTION TAKEN WITHOUT THE KNOWLEDGE AND CONSENT OF THE ENGINEER & SIP ENGINEERING CONSULTANTS, LLC, IN CONTRADICTION TO THESE DRAWINGS OR THE RECOMMENDATIONS OF THE ENGINEER SHALL BECOME THE RESPONSIBILITY OF THE PARTIES RESPONSIBLE FOR TAKING SUCH ACTION.

* Copyright© 2024
SIP Engineering Consultants, LLC
All Rights Reserved

EXPIRATION:

THESE DRAWINGS EXPIRE ON AND MUST BE UPDATED AND RE-SUBMITTED UPON ARIZONA'S ADOPTION OF THE NEXT IBC/IRC, OR UPON THE ENGINEER'S LICENSE EXPIRATION DATE INDICATED BELOW:

EXPIRES 6-30-26

DATE:	REV:	DESCRIPTION:
3-5-26	1	WALL CLADDING & ROOF TRUSS OPTION NOTES REMOVED

* CONFIDENTIAL
AS INSTRUMENTS OF SERVICE, THESE DRAWINGS SHALL REMAIN THE PROPERTY OF SIP ENGINEERING CONSULTANTS, LLC WHO SHALL RETAIN ALL COMMON LAW, STATUTORY & OTHER RESERVED RIGHTS, WITH RESPECT TO: 1) TECHNICAL INFORMATION NOT (DETERMINED & PROVIDED) BY BOXABL, INC. 2) THE OVERALL AESTHETIC & LAYOUT PRESENTATION, INCLUDING POSITIONING OF DRAWING ELEMENTS, SHADING, HATCHING, ETC. REPRODUCTION IS PROHIBITED WITHOUT THE EXPRESSED, WRITTEN PERMISSION OF SIP ENGINEERING CONSULTANTS, LLC.

DRAWINGS INVALID IF PROJECT NAME & SITE ADDRESS IS INDICATED ANYWHERE

REGISTERED PROFESSIONAL ENGINEER STRUCTURAL
CERTIFICATE NO. 36860
MIKE J. NELSON
Date Signed 3-5-26
ARIZONA, U.S.A.

SIP ENGINEERING CONSULTANTS, LLC
14845 SW MURRAY SCHOLLS DR. SUITE 110 PMB 306
BEAVERTON, OR 97007
PHONE : 503-564-4178
Mike@SIPconsultants.com

UNITS:	FT-IN
SHEET FORMAT:	ARCH C
SHEET SCALE:	NONE
CREATED BY:	MN
RELEASE DATE:	2/10/2026
SHEET:	S1

2 DOOR CASITA
MODEL # BXB-000009

CLIENT: BOXABL INC.
5345 EAST NORTH BELT ROAD
NORTH LAS VEGAS, NV 89115, USA
+1(702) 500-9000 HELLO@BOXABL.COM

SHEET NAME: DESIGN CRITERIA & GENERAL NOTES

BOXABL

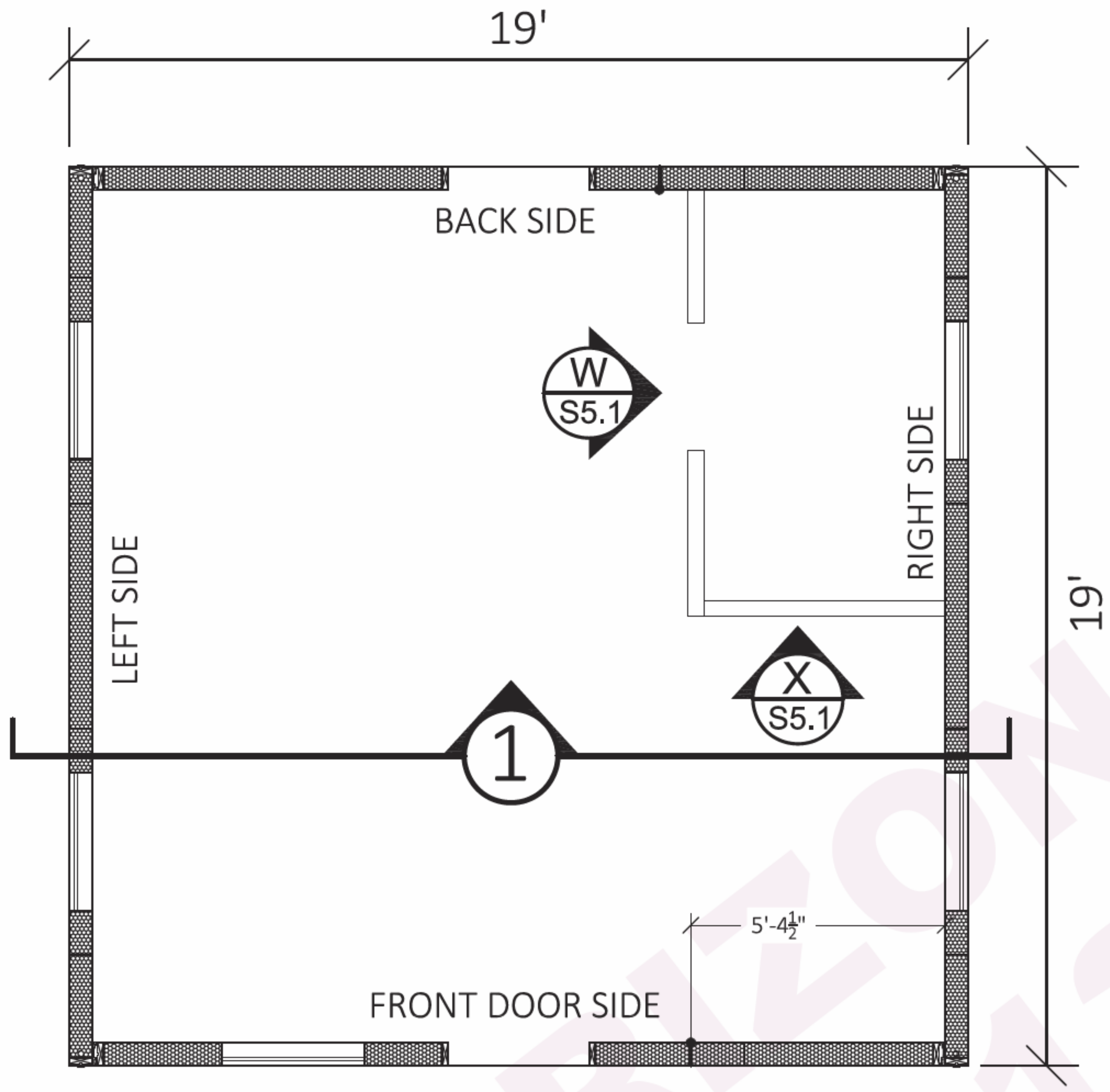

WALL PLAN

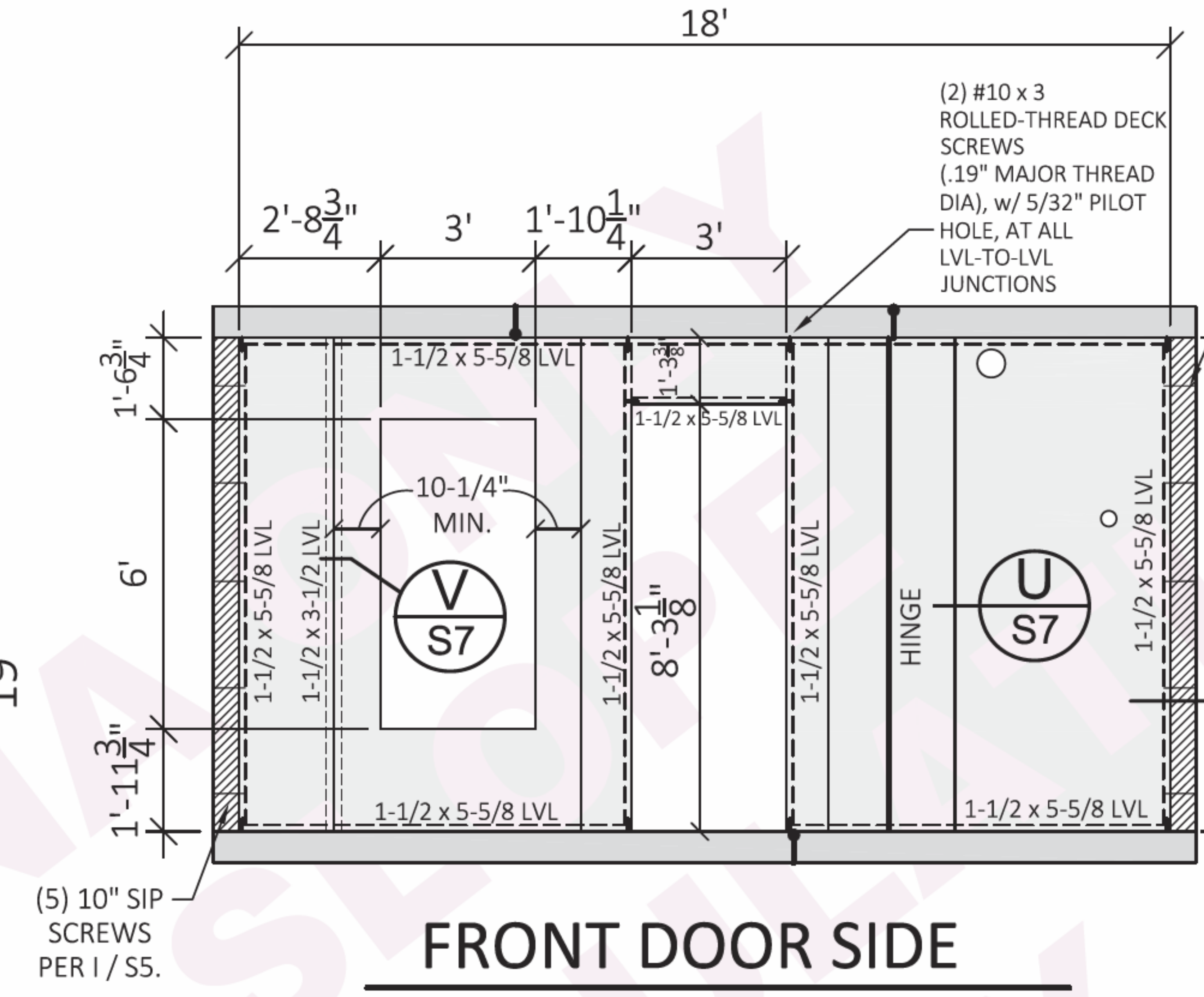

FRONT DOOR SIDE

EXTERIOR VIEW

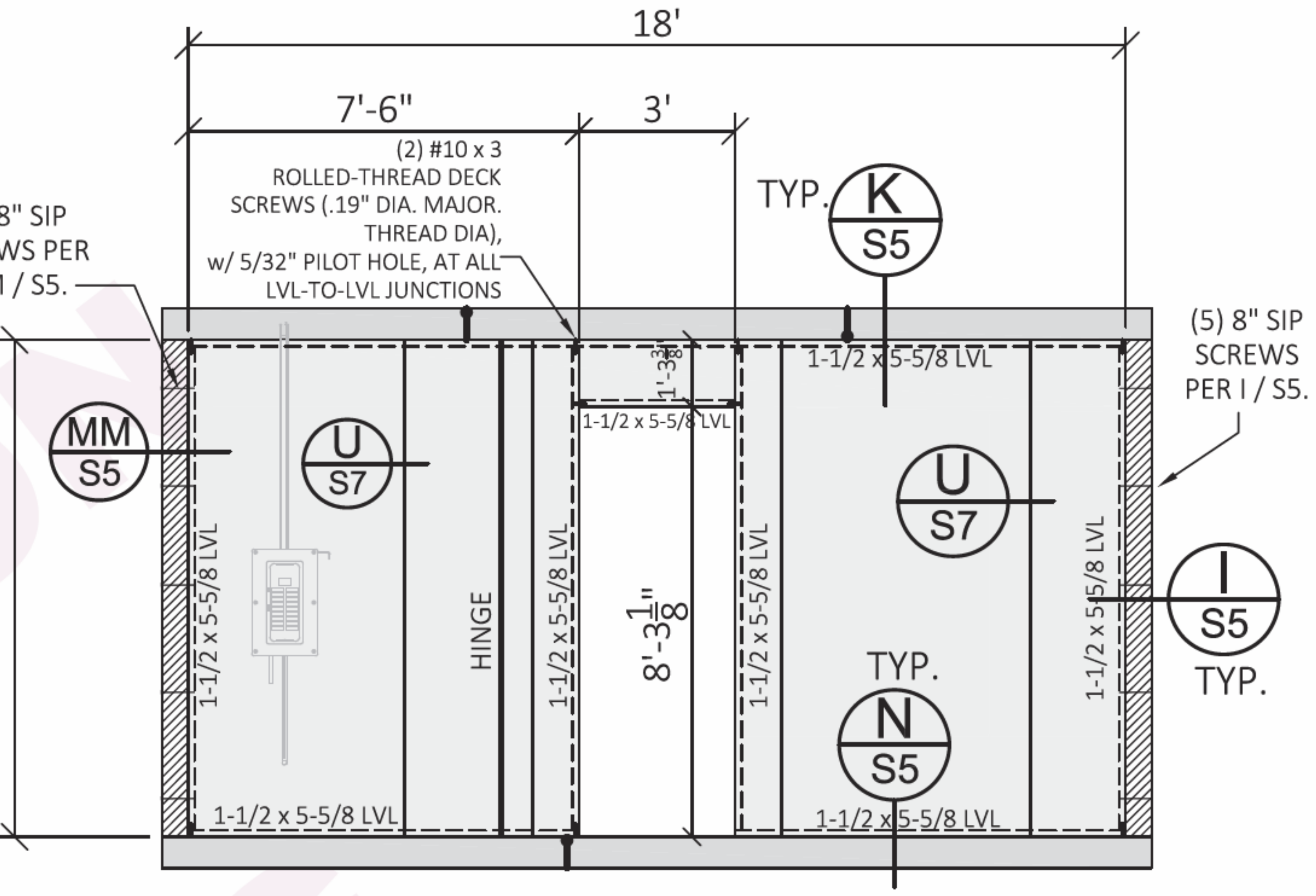

BACK SIDE

EXTERIOR VIEW

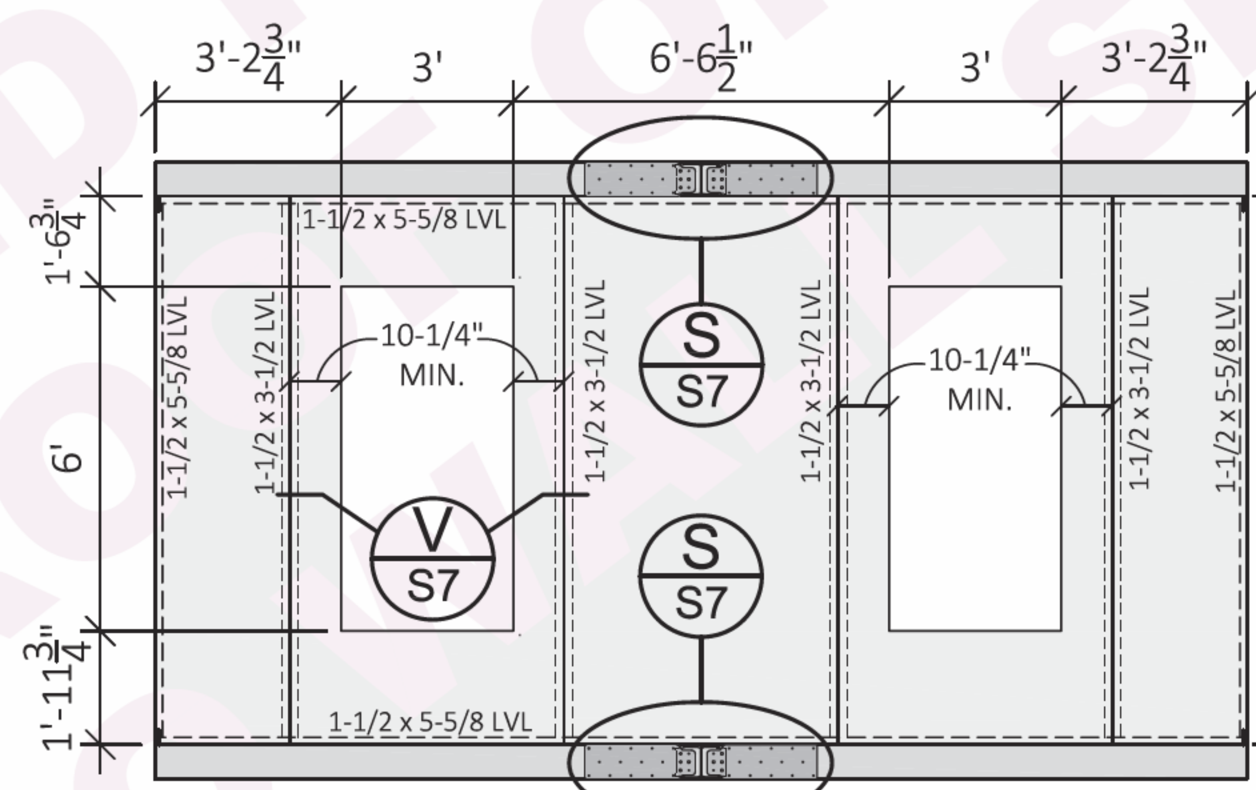

LEFT SIDE

EXTERIOR VIEW

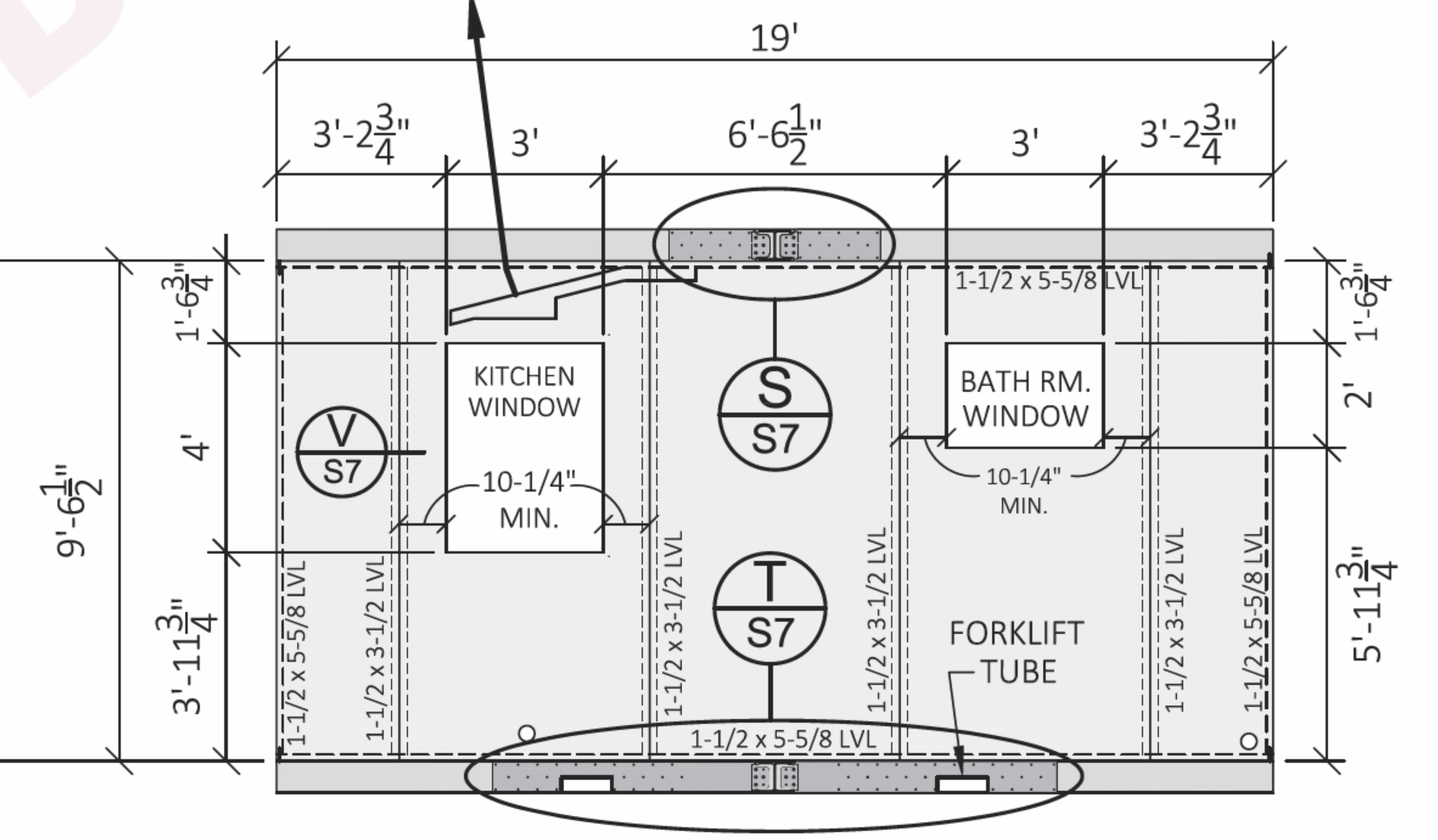

RIGHT SIDE

EXTERIOR VIEW

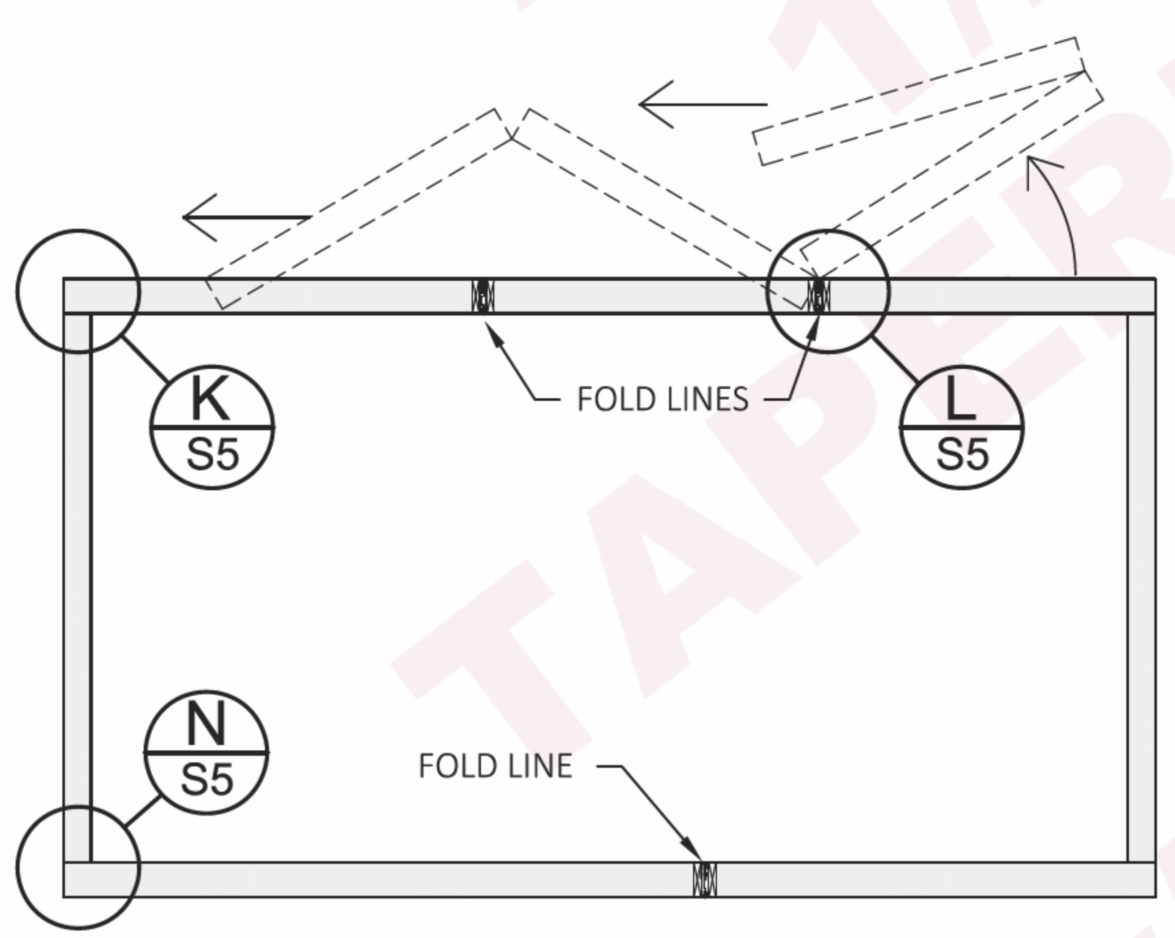

1 SECTION

NOTES:
1. EXCEPT FOR THE 19' OVERALL DIMENSIONS, ALL OTHER'S HAVE A ¼" +/- TOLERANCE.
2. ROUND HOLES SHOWN ARE APPROX. IN SIZE AND LOCATION.
3. LVL TO HAVE A MIN. FLEXURAL STRENGTH, Fb = 2,800 psi, AND MIN. MODULUS OF ELASTICITY, E = 2,000,000 PSI

STATE OF ARIZONA
REFER TO SHEET #1
Apr 03 2026
Review of this document does not authorize or approve any omission or deviation from the applicable standards
F9080-10

* Copyright© 2024 SIP Engineering Consultants, LLC
All Rights Reserved

EXPIRES 6-30-26

DATE:	REV:	DESCRIPTION:

* CONFIDENTIAL
AS INSTRUMENTS OF SERVICE, THESE DRAWINGS SHALL REMAIN THE PROPERTY OF SIP ENGINEERING CONSULTANTS, LLC WHO SHALL RETAIN ALL COMMON LAW, STATUTORY & OTHER RESERVED RIGHTS, WITH RESPECT TO: 1) TECHNICAL INFORMATION NOT (DETERMINED & PROVIDED) BY BOXABL, INC. 2) THE OVERALL AESTHETIC & LAYOUT PRESENTATION, INCLUDING POSITIONING OF DRAWING ELEMENTS, SHADING, HATCHING, ETC. REPRODUCTION IS PROHIBITED WITHOUT THE EXPRESSED, WRITTEN PERMISSION OF SIP ENGINEERING CONSULTANTS, LLC.

DRAWINGS INVALID IF PROJECT NAME & SITE ADDRESS IS INDICATED ANYWHERE
MIKE J. NELSON
2-10-26
ARIZONA, U.S.A.

SIP ENGINEERING CONSULTANTS, LLC
14845 SW MURRAY SCHOLLS DR. SUITE 110 PMB 306
BEAVERTON, OR 97007
PHONE : 503-564-4178
Mike@SIPconsultants.com

UNITS:	FT-IN
SHEET FORMAT:	ARCH C
SHEET SCALE:	NONE
CREATED BY:	MN
RELEASE DATE:	2/10/2026
SHEET:	S2

2 DOOR CASITA
MODEL # BXB-000009

CLIENT: BOXABL INC.
5345 EAST NORTH BELT ROAD
NORTH LAS VEGAS, NV 89115, USA
+1(702) 500-9000 HELLO@BOXABL.COM

SHEET NAME: WALL PLAN, ELEVATIONS & SECTION

BOXABL

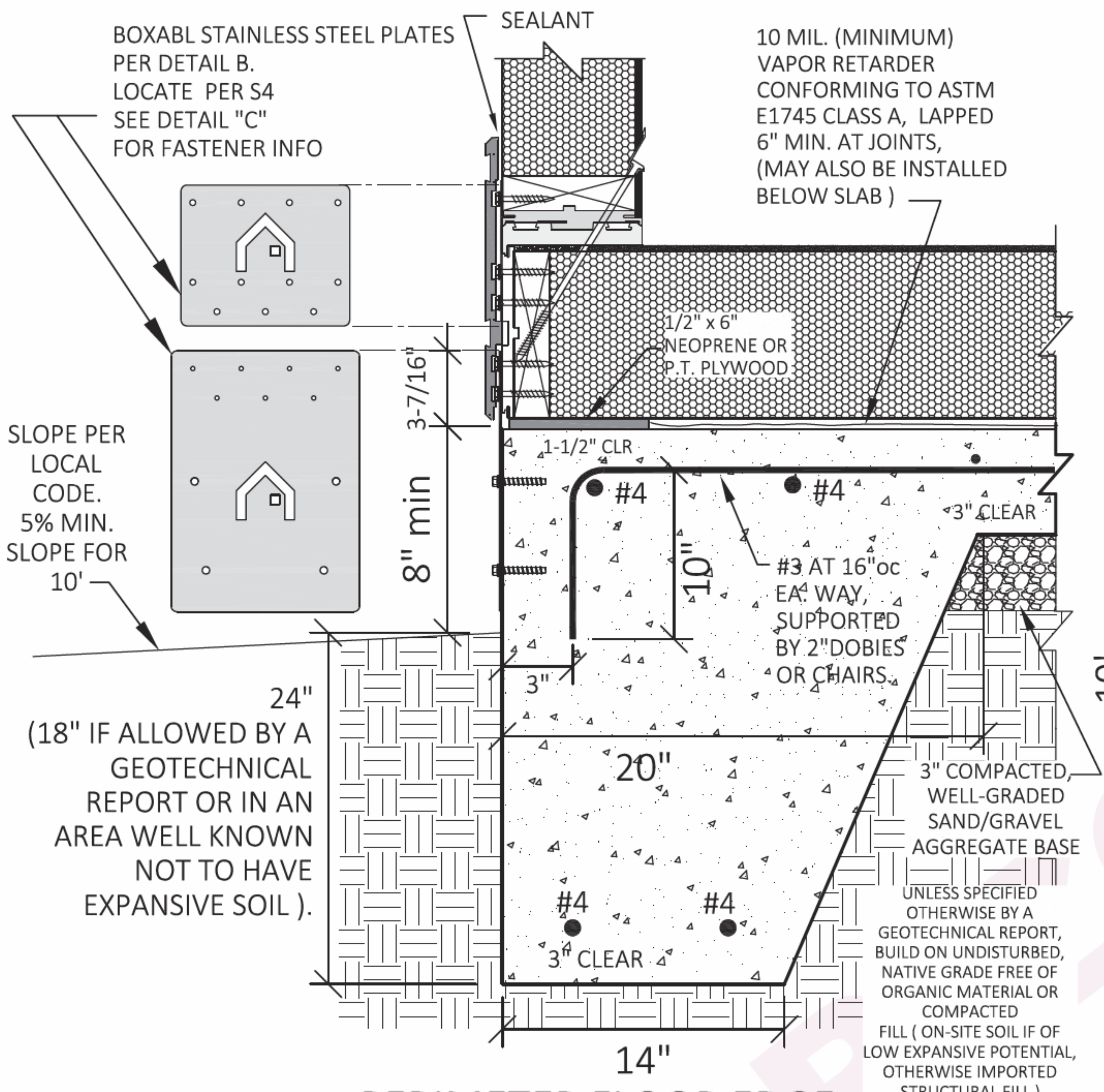

A PERIMETER FLOOR EDGE

SCALE: NONE

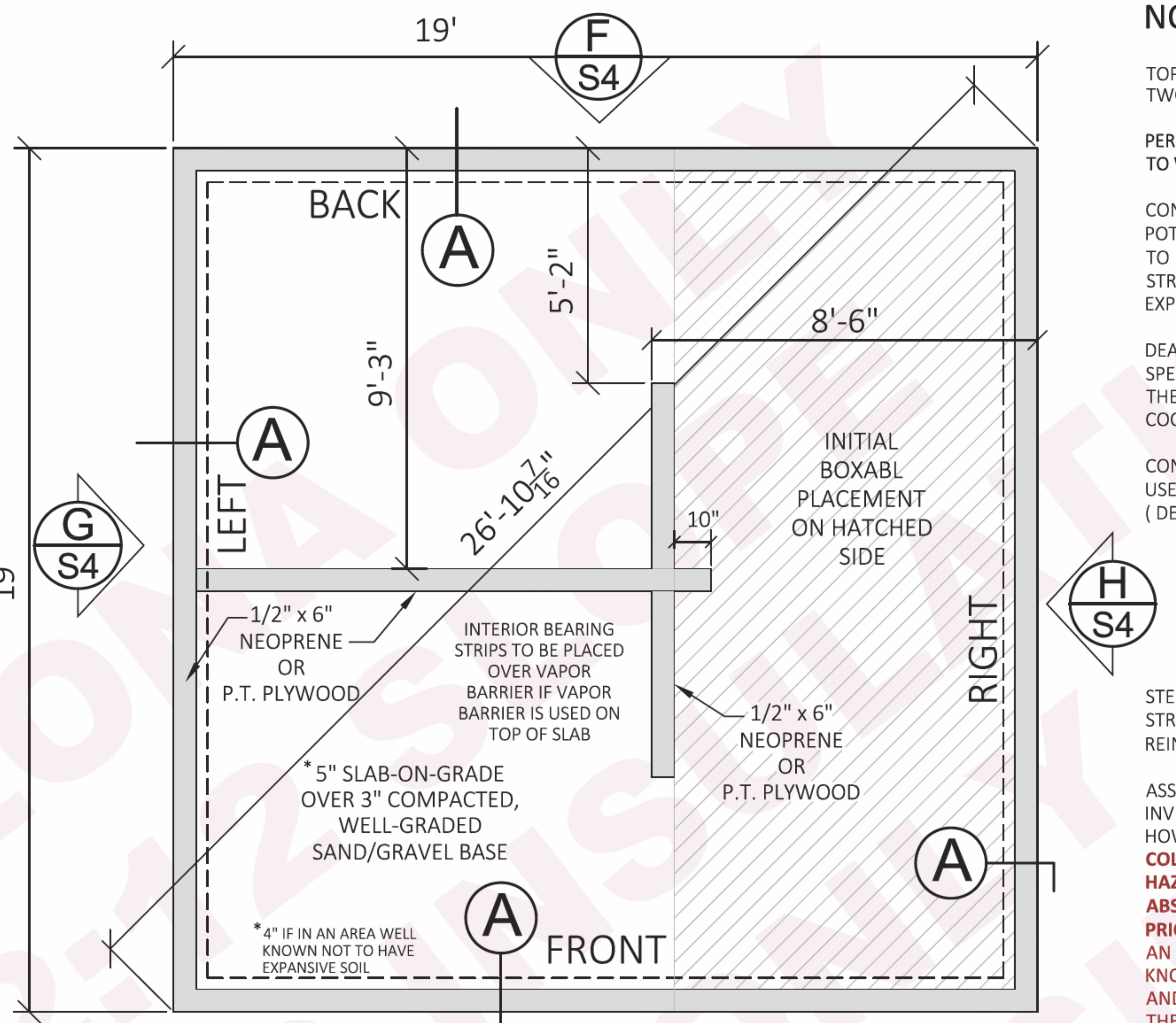

FOUNDATION PLAN

E S4

LEVEL GROUND CONDITION ONLY

FOR OTHER FOUNDATION DESIGNS, TO ACCOMMODATE SLOPING GRADE, FLOOD CONDITIONS, ETC, CONTACT THE ENGINEER IN THE TITLE BLOCK BELOW

(SG) PLAN FOR REFERENCE ONLY. SEPARATE INSTALLATION PLAN APPROVAL REQUIRED FOR INSTALLATION OF UNIT AT SITE

STATE OF ARIZONA
REFER TO SHEET #1

Apr 03 2026

Review of this document does not authorize or approve any omission or deviation from the applicable standards

F9080-10

NOTES:

TOP SURFACE OF PERIMETER CONCRETE SHALL BE FLAT AND LEVEL TO WITHIN ⅛" BETWEEN ANY TWO POINTS AROUND THE PERIMETER.

PERIMETER & DIAGONAL DIMENSIONS HAVE NO MARGIN FOR ERROR FOR ANCHORAGE HARDWARE TO WORK AS INTENDED.

CONCRETE TO HAVE A MIN. 28 DAY COMPRESSIVE STRENGTH, f'c = 2,500 psi WHERE WEATHERING POTENTIAL IS NEGLIGIBLE. WHERE NOT NEGLIGIBLE, f'c TO INCREASE TO 3,000 PSI AND CONCRETE TO HAVE 5% TO 7% AIR ENTRAINMENT (BY VOLUME) - SPECIAL INPECTION IS NOT REQ'D SINCE STRUCTURAL DESIGN IS STILL BASED ON 2,500 PSI. CONTRACTOR MUST HAVE EXPERIENCE AND EXPERTISE IN PROPER CURING METHODS WHEN POURING IN HOT AND COLD WEATHER.

DEALER, OWNER, INSTALLER, OR CONTRACTOR TO VERIFY w/ BUILDING DEPARTMENT IF ANY SPECIAL INSPECTIONS ARE REQUIRED BY THE CITY BEFORE START OF CONSTRUCTION, AND IF SO, THE OWNER TO HIRE A SPECIAL INSPECTOR ACCEPTABLE TO THE BUILDING DEPARTMENT AND COORDINATE AN INSPECTION SCHEDULE WITH THE CONTRACTOR.

CONCRETE TO BE TYPE II, WITH MAXIMUM WATER/CEMENT RATIO = .5.
USE TYPE V CEMENT IF SOIL HAS HIGH SULFATE CONCENTRATION
(DETERMINED BY OTHERS).
- 5.5 SACK MINIMUM PORTLAND CEMENT COMPLYING WITH ASTM C150.
- AGGREGATES TO CONFORM TO ASTM C33
- CALCIUM CHLORIDE NOT ALLOWED, HOWEVER, WATER REDUCING ADMIXTURES MAY BE USED PER ASTM C494 AND PER MNFR'S SPECIFICATIONS.
- CONCRETE MIXING, DELIVERY & SLUMP TOLERANCE TO CONFORM TO ASTM C94.
- FIELD MEASURED SLUMP SHALL COMPLY WITH THE CONCRETE MIX DESIGN.

STEEL REINFORCEMENT SHALL COMPLY WITH THE REQ'TS OF ASTM A615, WITH MIN. YIELD STRENGTH = 60 ksi (GRADE 60).
REINF. TO BE CONTINUOUS, w # 4 BENT CORNER BARS w/ 12" LEGS TIED TO MAIN REINF.

ASSUMED ALLOWABLE SOIL BEARING PRESSURE = 1,500 PSF TO AVOID A GEOTECHNICAL INVESTIGATION PER IRC SECTION R401.1.
HOWEVER, **THIS DESIGN IS BASED ON THE ASSUMPTION THAT THERE IS NO EXPANSIVE SOIL, COLLAPSIBLE SOIL, CORROSIVE SOIL, SOIL SUBJECT TO LIQUIFACTION OR SOIL IN A FLOOD HAZARD ZONE, ALL OF WHICH REQUIRE A SITE-SPECIFIC DESIGN. VERIFICATION OF THE ABSENCE OF THESE CONDITIONS IS THE RESPONSIBILILITY OF THE DEALER, AND/OR OWNER PRIOR TO START OF CONSTRUCTION.**
AN INITIAL ASSESSMENT MAY COME IN THE FORM OF TALKING TO PEOPLE HAVING HISTORICAL KNOWLEDGE OF THE AREA, INCLUDING NEIGHBORS, REAL ESTATE AGENTS, LOCAL CONTRACTORS AND THE LOCAL BUILDING DEPT. IF IN DOUBT, GET A GEOTECHNICAL REPORT AND VERIFY THAT THE RECOMMENDATIONS ARE CONSISTENT WITH THE SPECIFICATIONS IN DETAIL "A". A REVIEW OF THE REPORT BY A STRUCTURAL ENGINEER IS RECOMMENDED TO DETERMINE IF ANY DESIGN MODIFICATIONS ARE REQ'D.
BOXABL AND THE ENGINEER ACCEPT NO RESPONSIBILITY OR LIABILITY FOR THE PERFORMANCE OF FOUNDATIONS ON SOIL THAT IS NOT ADEQUATELY PREPARED OR OTHERWISE IN COMPLIANCE WITH A GEOTECHNICAL REPORT IF ONE IS AVAILABLE.

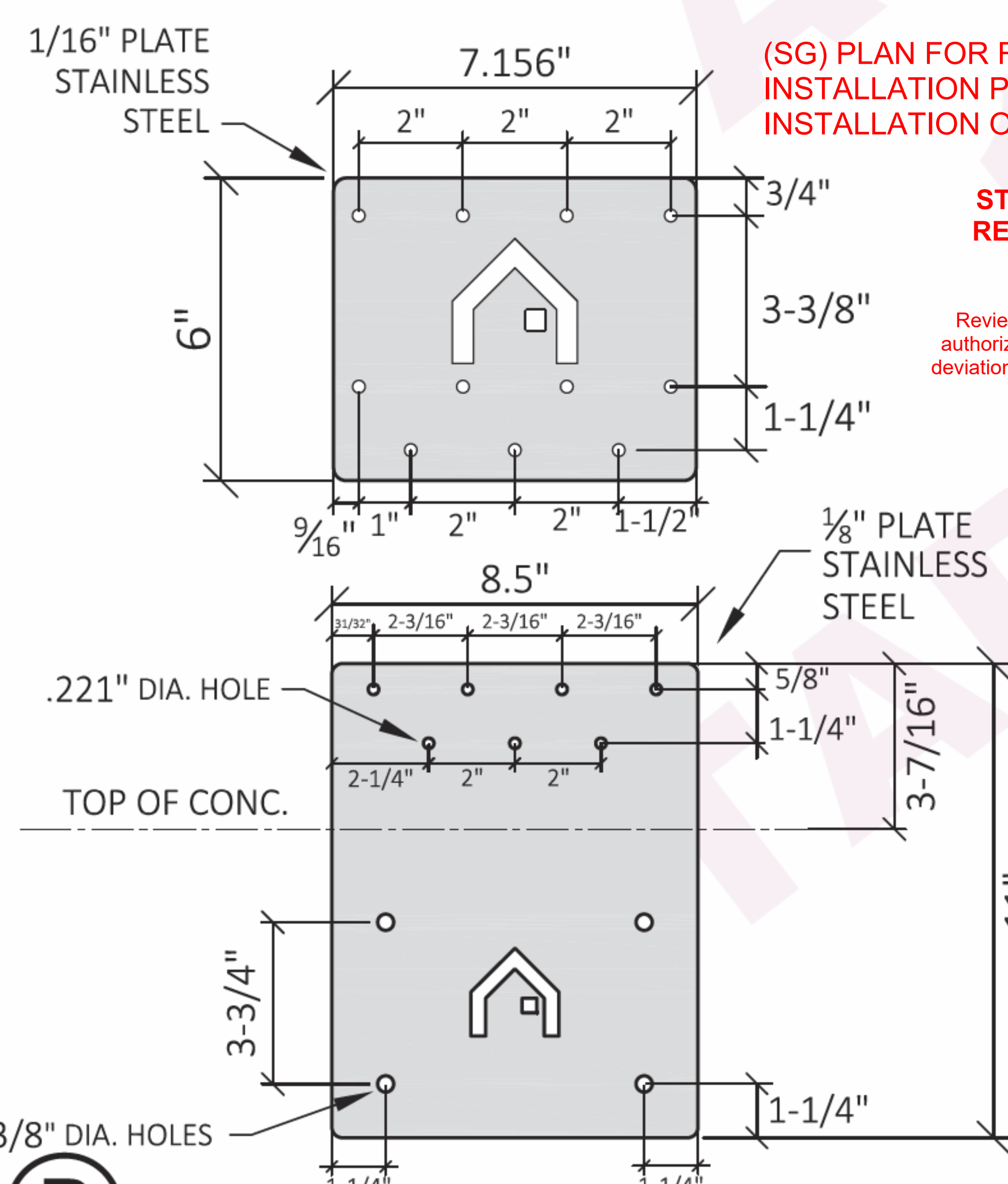

B

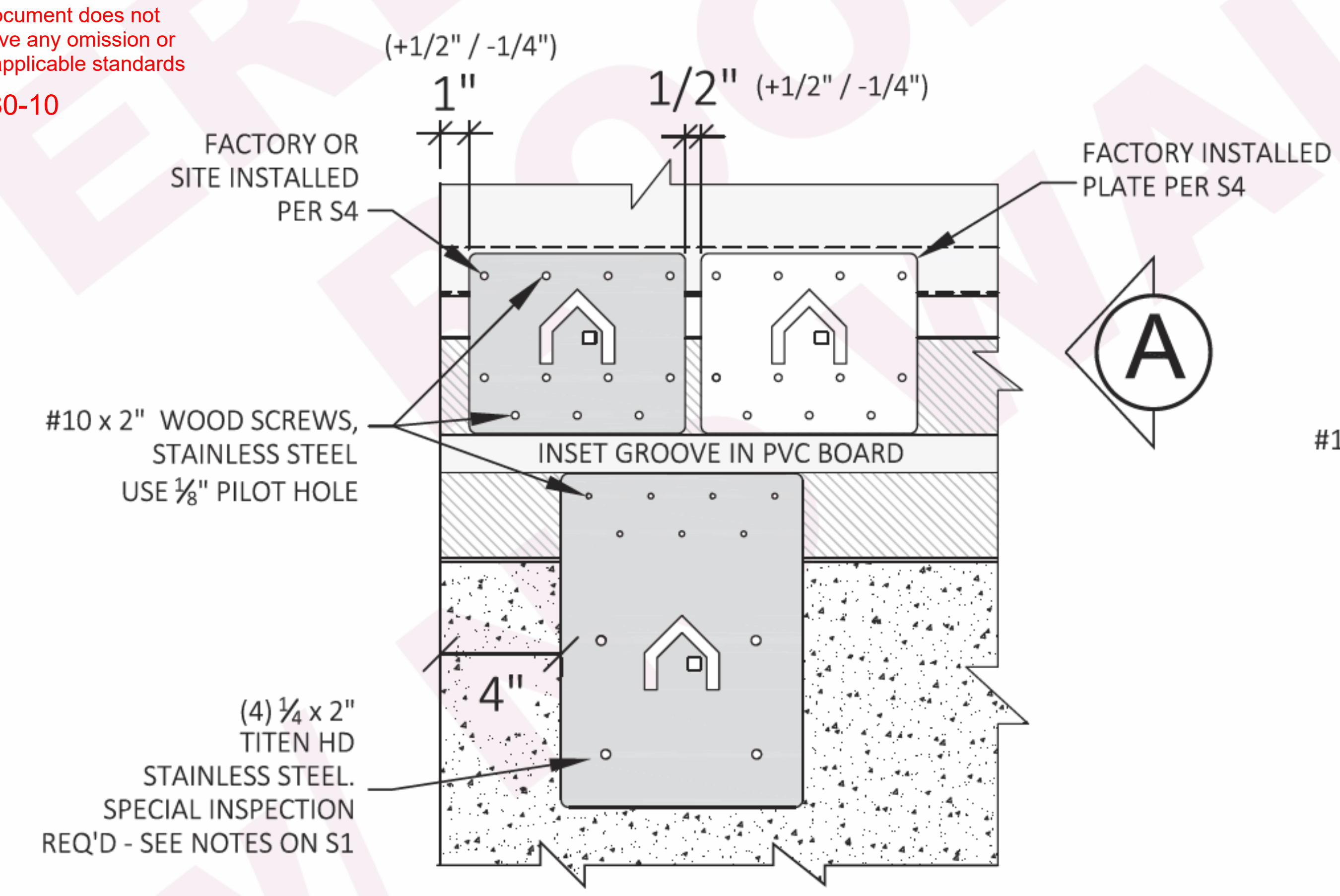

C HOLD-DOWNS AT LEFT & RIGHT WALL

SEE S4 FOR LOCATION REFERENCE

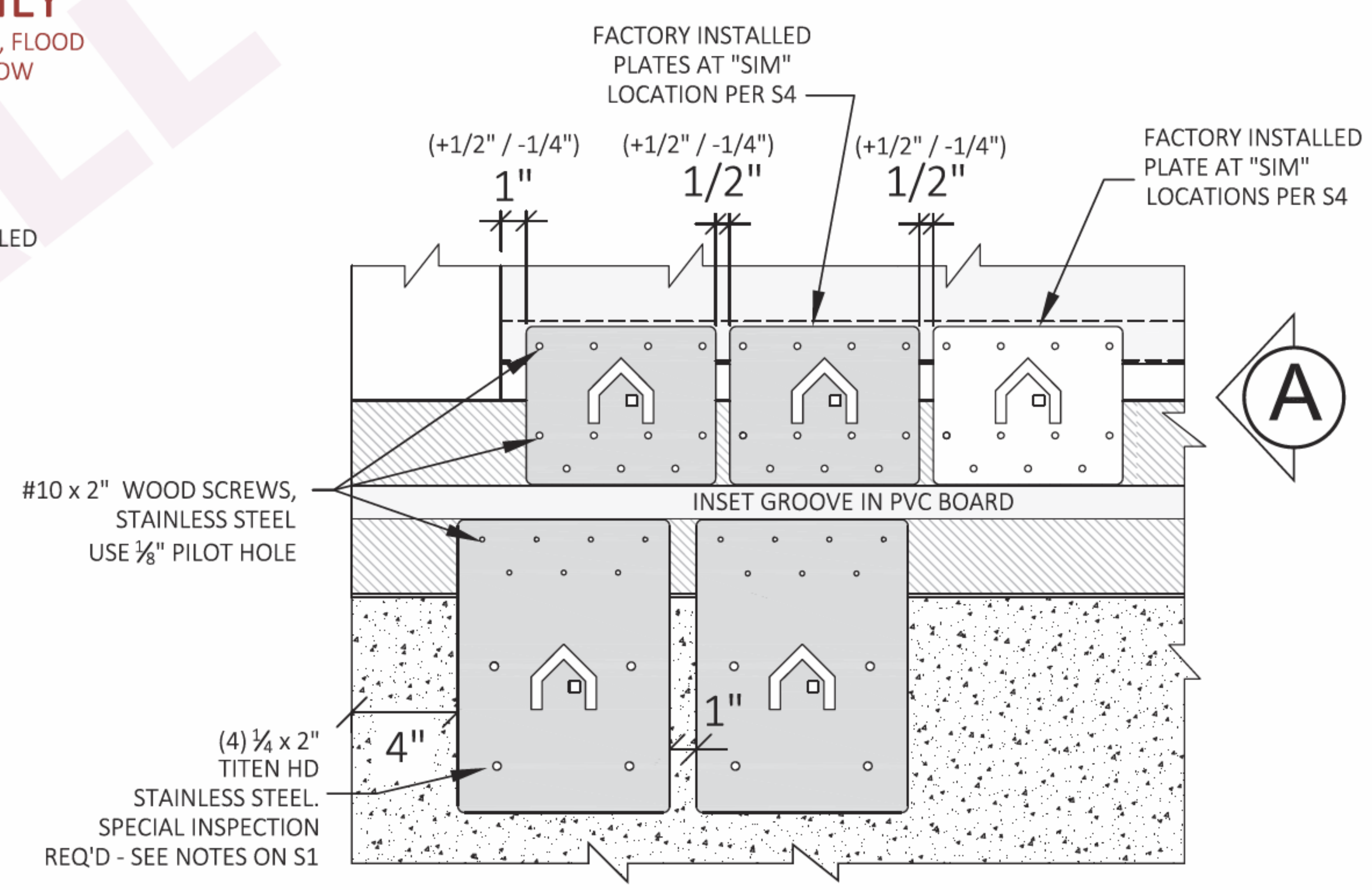

D HOLD-DOWNS AT FRONT & BACK WALL

SEE S4 FOR LOCATION REFERENCE

* Copyright© 2024 SIP Engineering Consultants, LLC
All Rights Reserved (except upper plates)

EXPIRES 6-30-26

DATE:	REV:	DESCRIPTION:

* CONFIDENTIAL
AS INSTRUMENTS OF SERVICE, THESE DRAWINGS SHALL REMAIN THE PROPERTY OF SIP ENGINEERING CONSULTANTS, LLC WHO SHALL RETAIN ALL COMMON LAW, STATUTORY & OTHER RESERVED RIGHTS, WITH RESPECT TO: 1) TECHNICAL INFORMATION NOT (DETERMINED & PROVIDED) BY BOXABL, INC. 2) THE OVERALL AESTHETIC & LAYOUT PRESENTATION, INCLUDING POSITIONING OF DRAWING ELEMENTS, SHADING, HATCHING, ETC. REPRODUCTION IS PROHIBITED WITHOUT THE EXPRESSED, WRITTEN PERMISSION OF SIP ENGINEERING CONSULTANTS, LLC.

DRAWINGS INVALID IF PROJECT NAME & SITE ADDRESS IS INDICATED ANYWHERE

MIKE J. NELSON — ARIZONA, U.S.A. — 2-10-26

SIP ENGINEERING CONSULTANTS, LLC
14845 SW MURRAY SCHOLLS DR.
SUITE 110 PMB 306
BEAVERTON, OR 97007
PHONE : 503-564-4178
Mike@SIPconsultants.com

UNITS:	FT-IN
SHEET FORMAT:	ARCH C
SHEET SCALE:	NONE
CREATED BY:	MN
RELEASE DATE:	2/10/2026
SHEET:	S3

2 DOOR CASITA
MODEL # BXB-000009

CLIENT: BOXABL INC.
5345 EAST NORTH BELT ROAD
NORTH LAS VEGAS, NV 89115, USA
+1(702) 500-9000 HELLO@BOXABL.COM

SHEET NAME: FOUNDATION PLAN & DETAILS

BOXABL

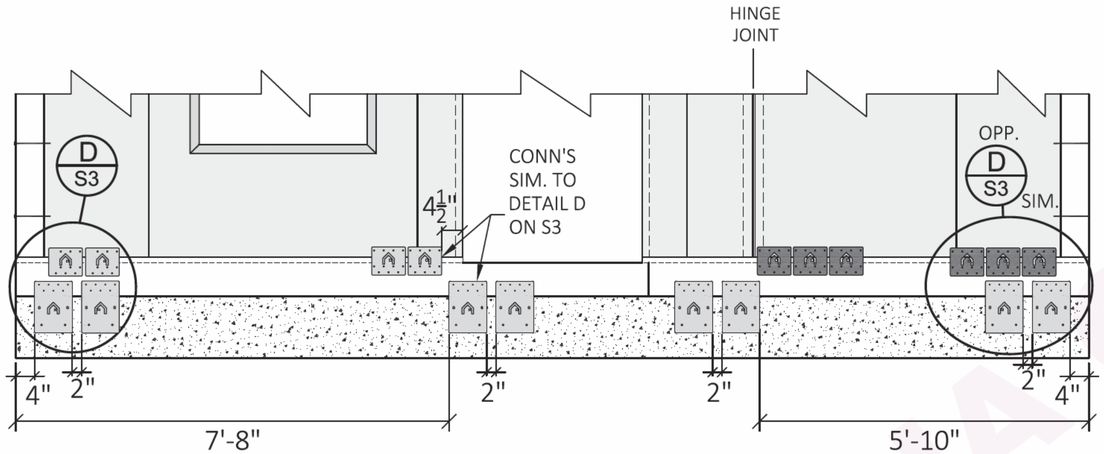

E FRONT WALL

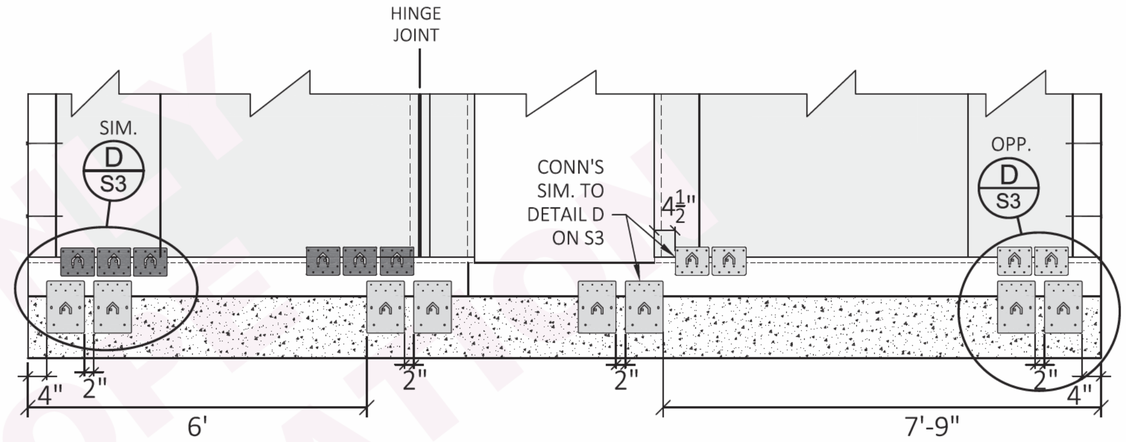

F BACK WALL

FACTORY INSTALLED BOXABL PLATES
(FIELD INSTALL IF ANY ARE MISSING)

FIELD INSTALLED BOXABL PLATES

FIELD INSTALLED BOXABL PLATES

(SG) PLAN FOR REFERENCE ONLY. SEPARATE INSTALLATION PLAN APPROVAL REQUIRED FOR INSTALLATION OF UNIT AT SITE

STATE OF ARIZONA
REFER TO SHEET #1

Apr 03 2026

Review of this document does not authorize or approve any omission or deviation from the applicable standards

F9080-10

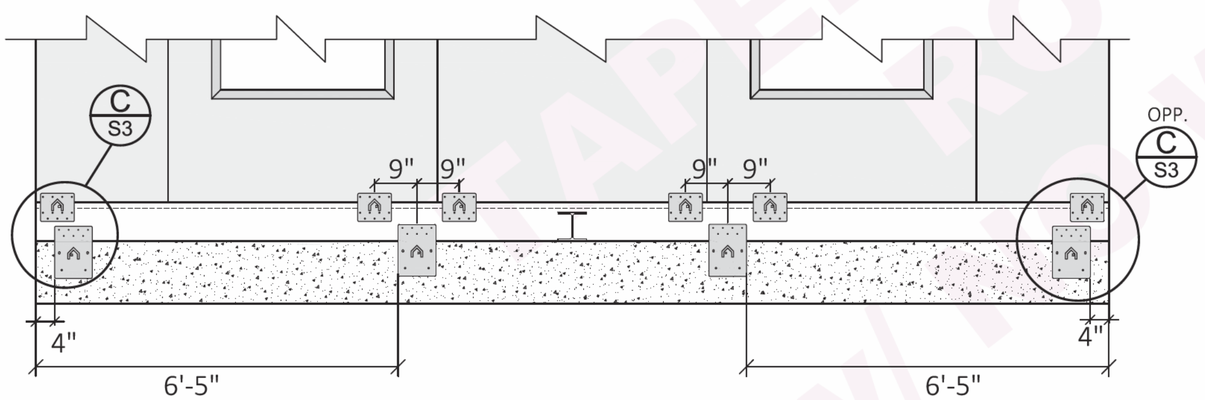

G LEFT WALL

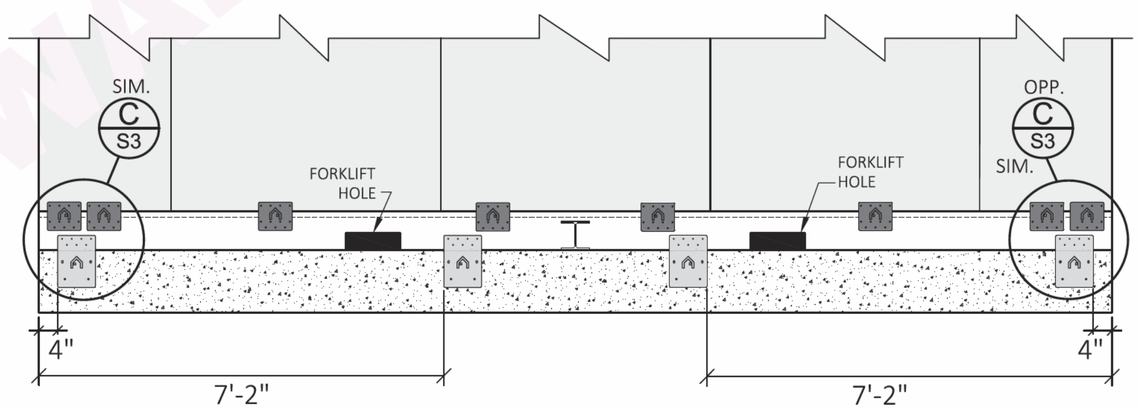

H RIGHT WALL

KITCHEN SIDE

ARIZONA ONLY
1/2:12 SLOPE
TAPERED INSULATED
ROOF ONLY
W/ FOWALL SIDING

*Copyright© 2024 SIP Engineering Consultants, LLC All Rights Reserved

EXPIRES 6-30-26

DATE:	REV:	DESCRIPTION:

* CONFIDENTIAL
AS INSTRUMENTS OF SERVICE, THESE DRAWINGS SHALL REMAIN THE PROPERTY OF SIP ENGINEERING CONSULTANTS, LLC WHO SHALL RETAIN ALL COMMON LAW, STATUTORY & OTHER RESERVED RIGHTS, WITH RESPECT TO: 1) TECHNICAL INFORMATION NOT (DETERMINED & PROVIDED) BY BOXABL, INC. 2) THE OVERALL AESTHETIC & LAYOUT PRESENTATION, INCLUDING POSITIONING OF DRAWING ELEMENTS, SHADING, HATCHING, ETC. REPRODUCTION IS PROHIBITED WITHOUT THE EXPRESSED, WRITTEN PERMISSION OF SIP ENGINEERING CONSULTANTS, LLC.

DRAWING IS INVALID IF PROJECT NAME & SITE ADDRESS IS INDICATED ANYWHERE

REGISTERED PROFESSIONAL ENGINEER (CIVIL) MIKE J. NELSON ARIZONA, U.S.A.
Date signed 2-10-26

SIP ENGINEERING CONSULTANTS, LLC
14845 SW MURRAY SCHOLLS DR.
SUITE 110 PMB 306
BEAVERTON, OR 97007
PHONE : 503-564-4178
Mike@SIPconsultants.com

UNITS:	FT-IN
SHEET FORMAT:	ARCH C
SHEET SCALE:	NONE
CREATED BY:	MN
RELEASE DATE:	2/10/2026
SHEET:	S4

2 DOOR CASITA
MODEL # BXB-000009

CLIENT: BOXABL INC.
5345 EAST NORTH BELT ROAD
NORTH LAS VEGAS, NV 89115, USA
+1(702) 500-9000 HELLO@BOXABL.COM

SHEET NAME: FOUNDATION CONNECTION LAYOUT

BOXABL

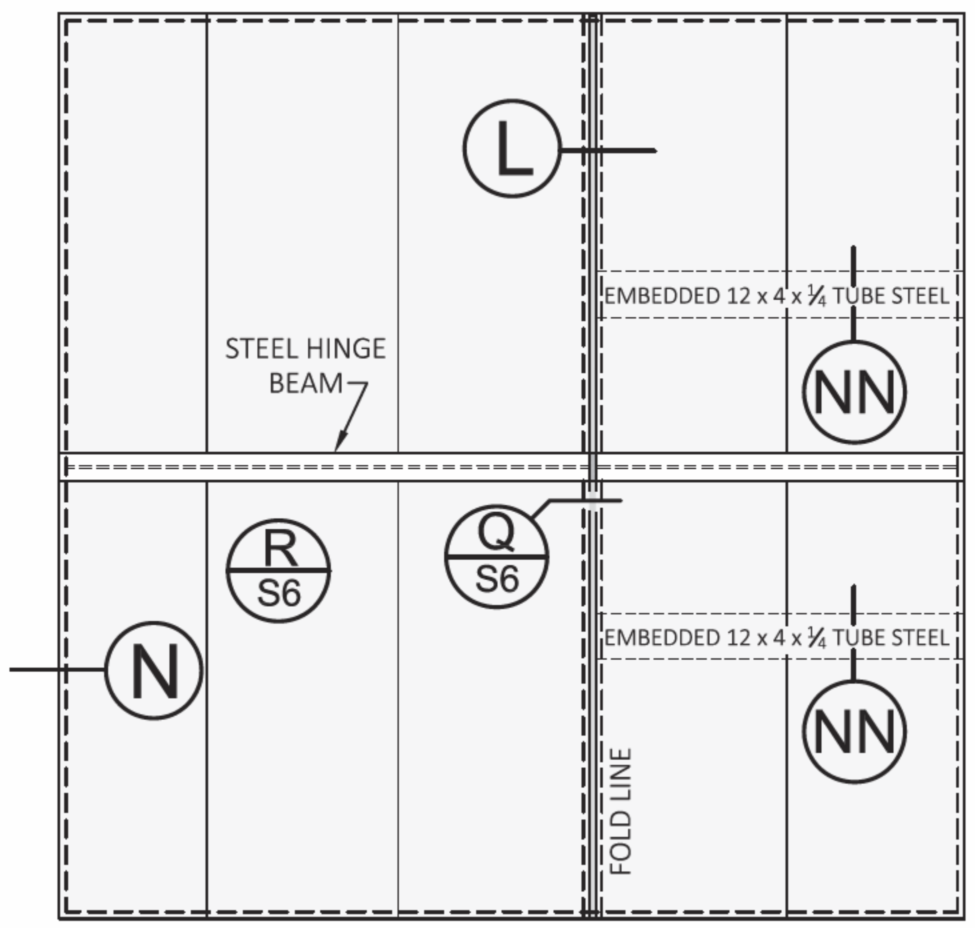

FLOOR PANEL LAYOUT

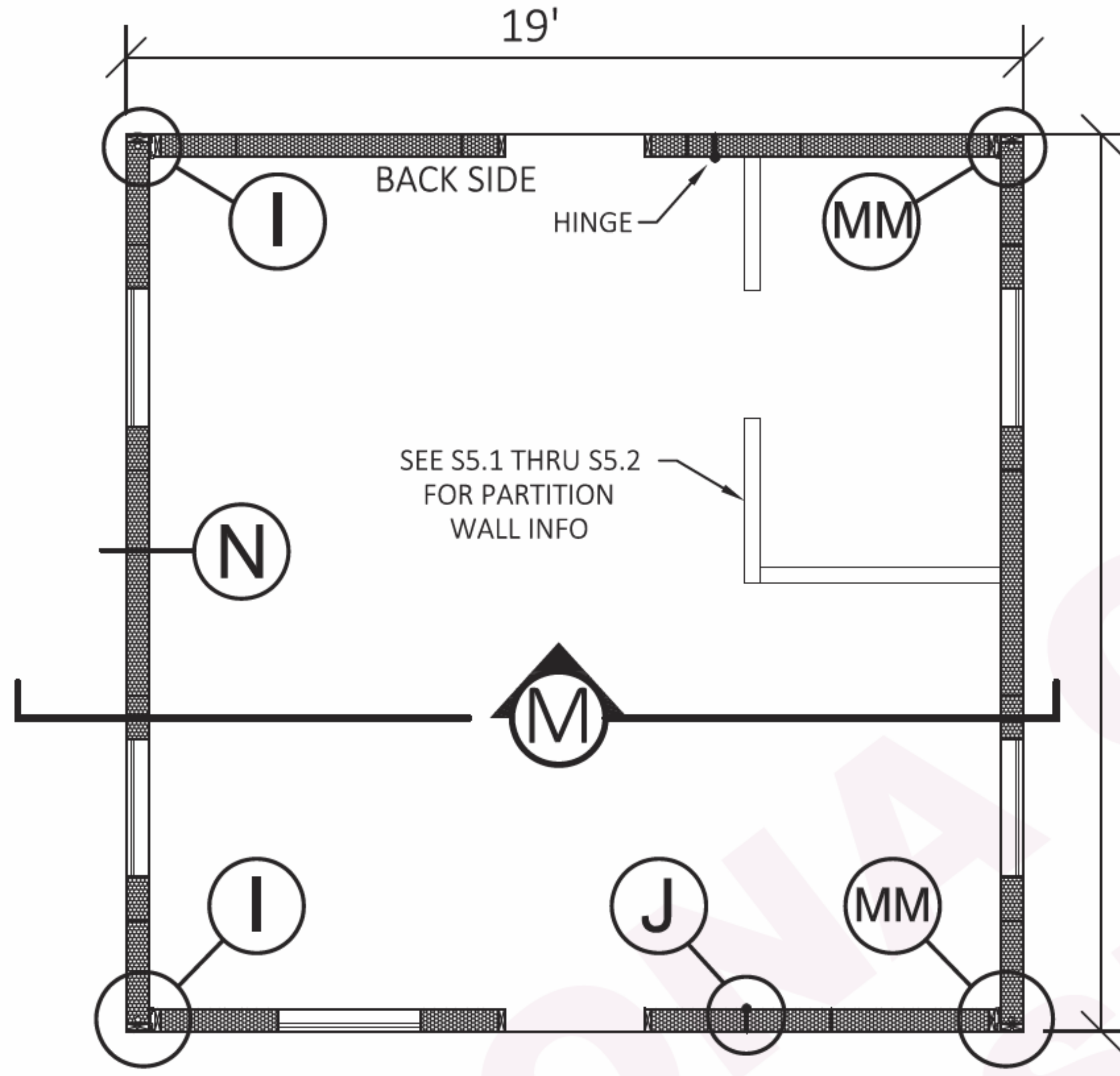

WALL PLAN

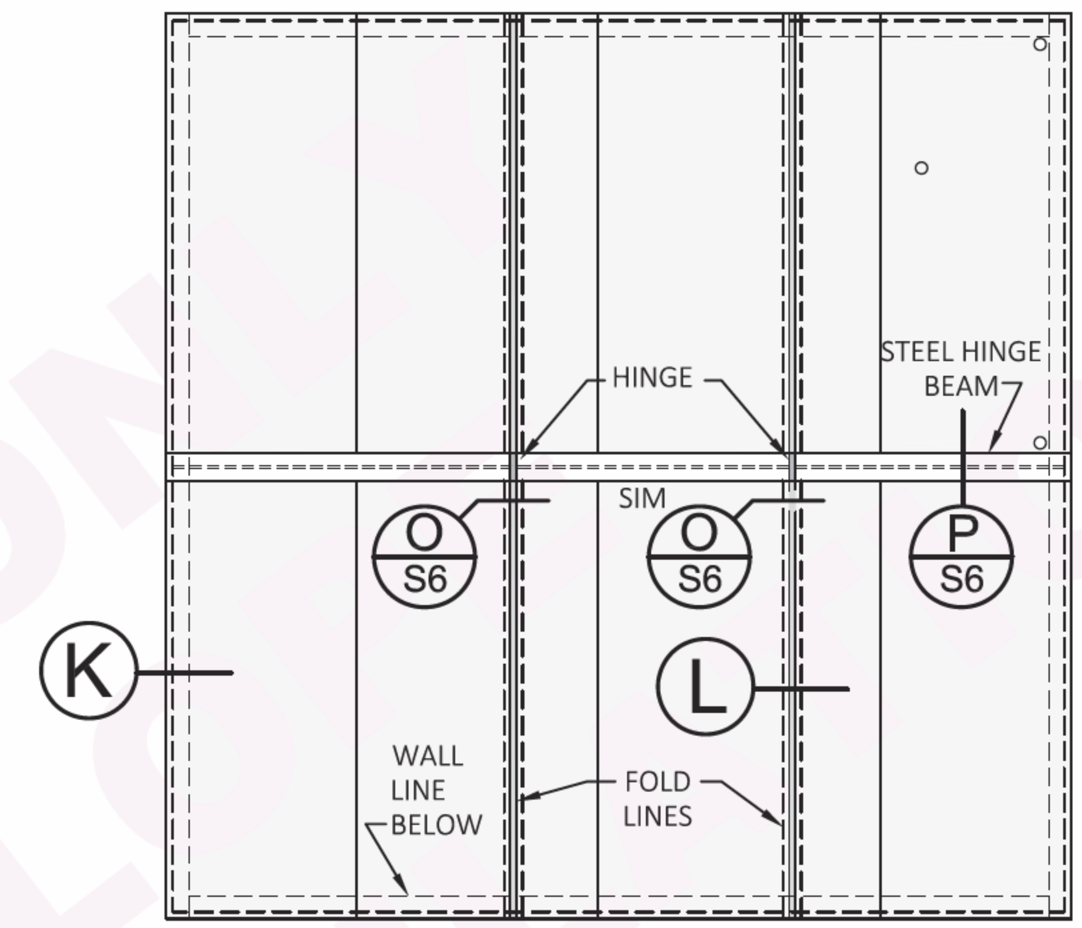

ROOF PANEL LAYOUT

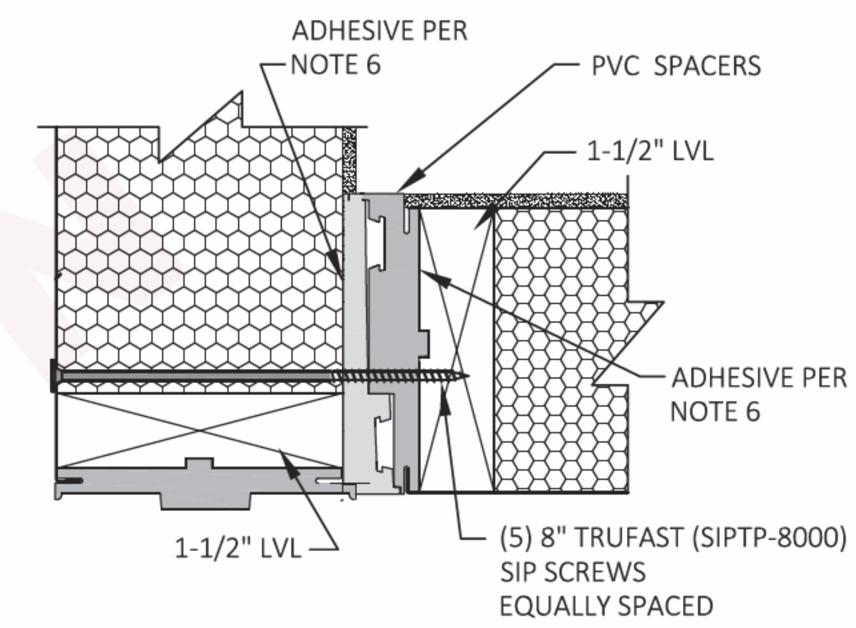

I CORNER CONN. SWING WALLS

SCALE: NONE

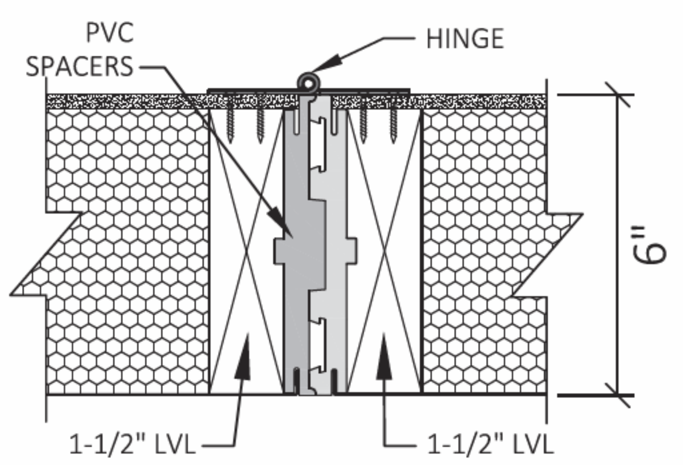

J WALL HINGE CONN.

SCALE: NONE

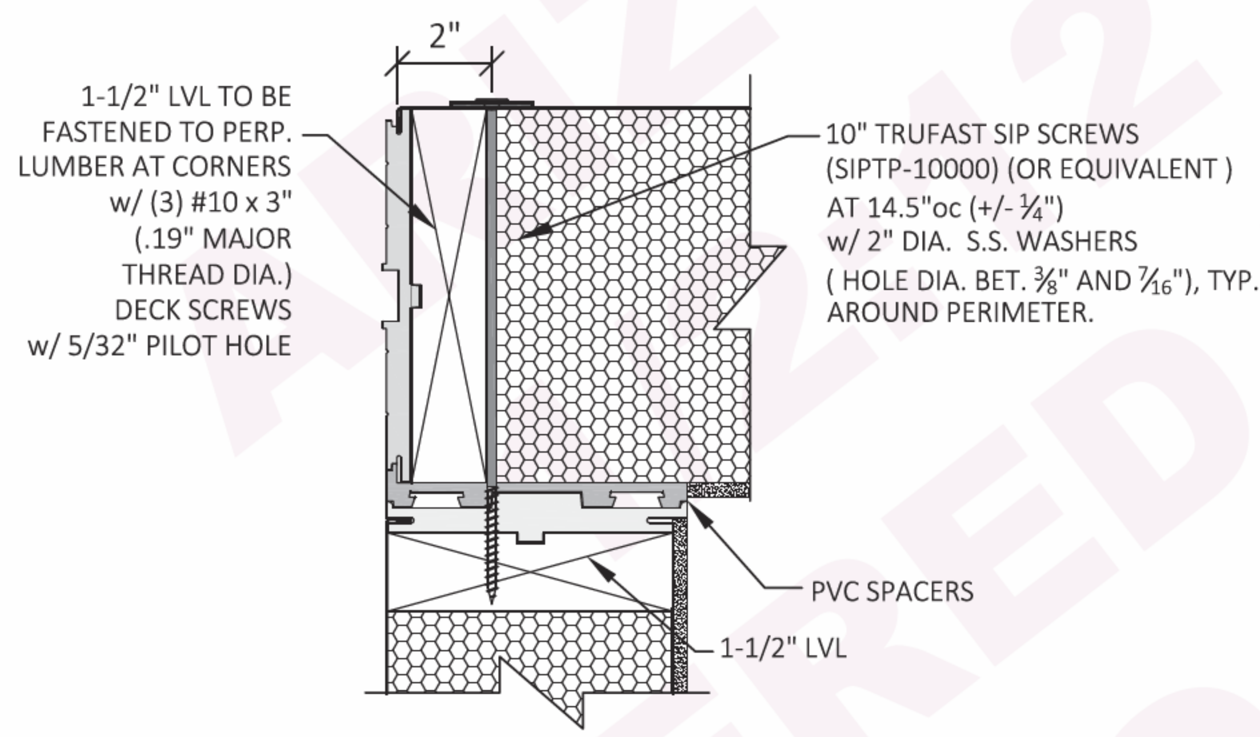

K ROOF / WALL CONN.

SCALE: NONE

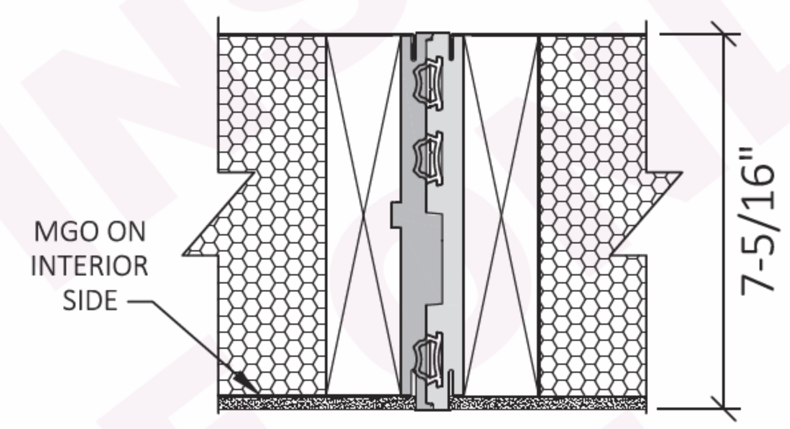

L ROOF / FLOOR JOINT AT FOLD LINE

SCALE: NONE

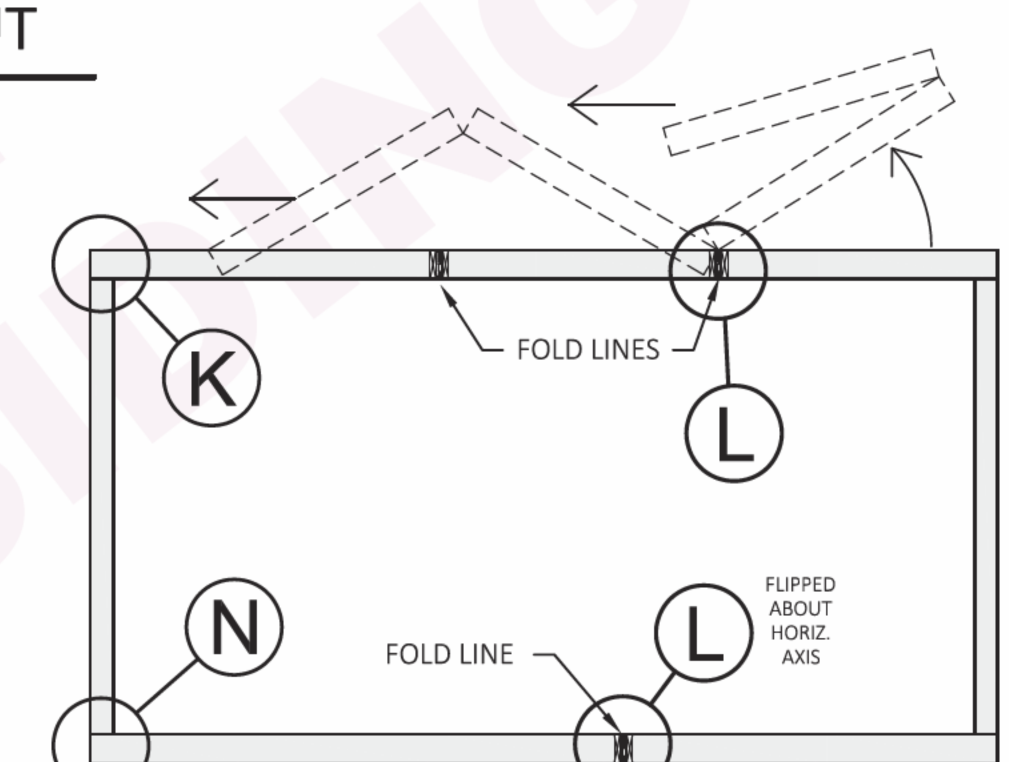

M SECTION

NOTES:

1. EMBEDED LUMBER TO BE LAMINATED VENEER LUMBER (LVL), GRADE 2.0E, Fb = 2,800 psf MIN.
2. 24 GA. STEEL OUTER SKIN: ASTM A1003 STRUCTURAL GRADE 33 (GRADE 230) TYPE H.
3. HSS TUBE STEEL TO COMPLY w/ ASTN A 500 , GRADE B OR ASTM A 1085.
4. EPS CORE: 1 pcf DENSITY
5. INNER SKIN: 1/4" MGO (MADE w/o SOREL CEMENT)
6. THE FOLLOWING ADJOINING SURFACES TO BE COATED w/ ADHESIVE:
PVC-TO-MGO, PVC-TO-WOOD, WOOD-TO-METAL SKIN, WOOD-TO-PVC, WOOD-TO-EPS, EPS-TO-METAL SKIN, EPS-TO-MGO.
ADHESIVE TO COMPLY w/ TYPE II, CLASS 2 PERFORMANCE REQ'TS SET FORTH IN ICC-ES ACCEPTANCE CRITERIA FOR SANDWICH PANELS (AC05).
7. ALL STRUCTURAL INSULATED PANELS TO BE TESTED ACCORDING TO THE APPROVED JUNE 2019 (EDITORIALLY REVISED DECEMBER 2020) VERSION OF ACCEPTANCE CRITERIA ICC-ES AC04 INCLUDING, BUT NOT LIMITED TO: ASTM E72 ASTM E136-04 ASTM E331

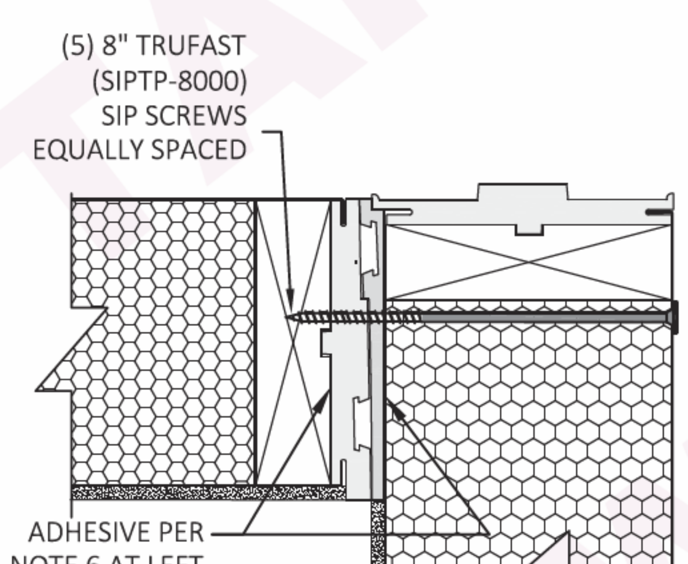

MM FIXED WALL CORNER CONN.

SCALE: NONE

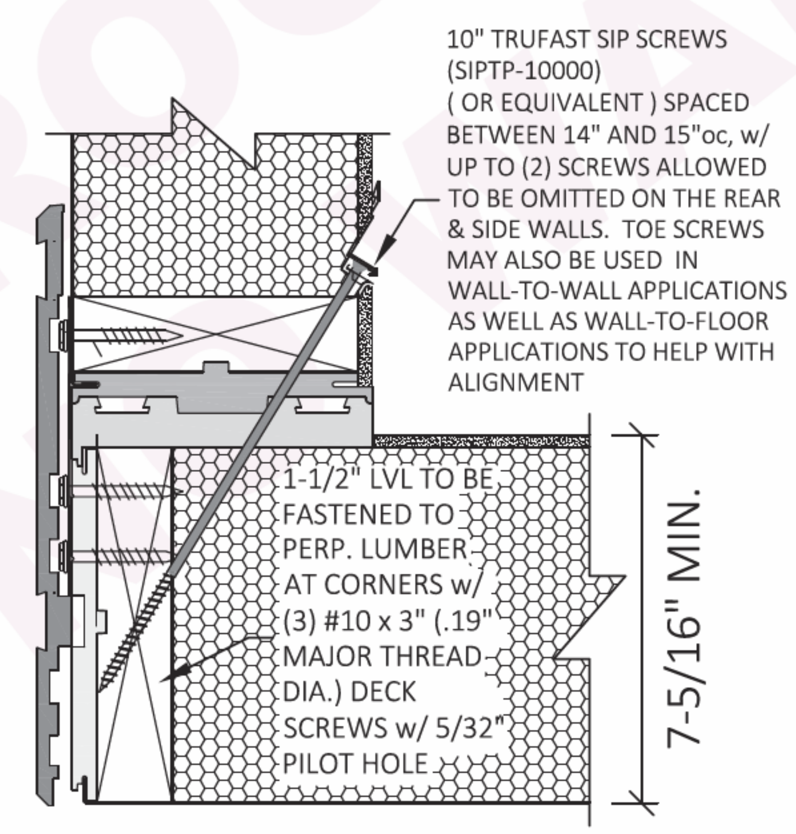

N FLOOR / WALL CONN.

SCALE: NONE

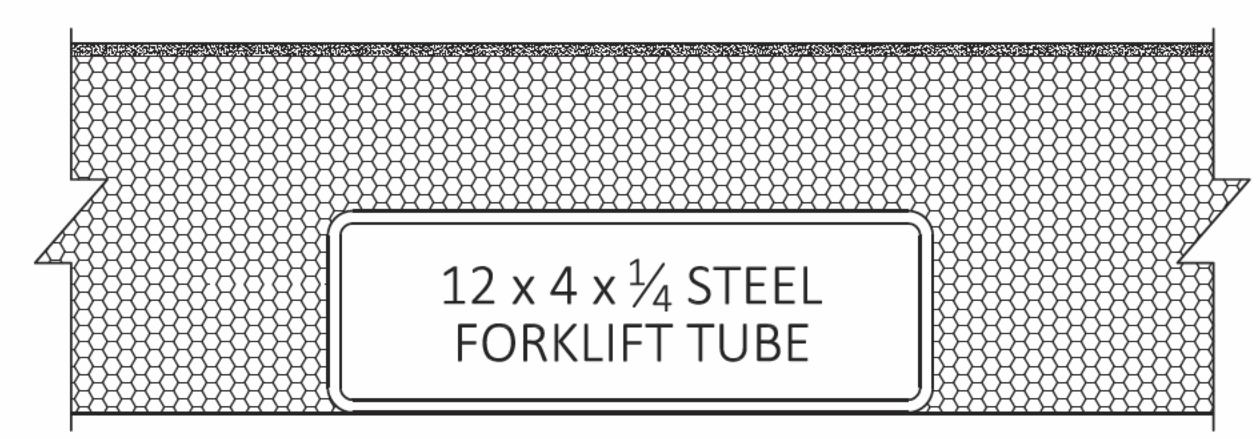

NN FLOOR / WALL CONN.

SCALE: NONE

STATE OF ARIZONA
REFER TO SHEET #1
Apr 03 2026
Review of this document does not authorize or approve any omission or deviation from the applicable standards
F9080-10

* Copyright© 2024 SIP Engineering Consultants, LLC All Rights Reserved

EXPIRES 6-30-26

DATE:	REV:	DESCRIPTION:

* CONFIDENTIAL
AS INSTRUMENTS OF SERVICE, THESE DRAWINGS SHALL REMAIN THE PROPERTY OF SIP ENGINEERING CONSULTANTS, LLC WHO SHALL RETAIN ALL COMMON LAW, STATUTORY & OTHER RESERVED RIGHTS, WITH RESPECT TO: 1) TECHNICAL INFORMATION NOT (DETERMINED & PROVIDED) BY BOXABL, INC. 2) THE OVERALL AESTHETIC & LAYOUT PRESENTATION, INCLUDING POSITIONING OF DRAWING ELEMENTS, SHADING, HATCHING, ETC. REPRODUCTION IS PROHIBITED WITHOUT THE EXPRESSED, WRITTEN PERMISSION OF SIP ENGINEERING CONSULTANTS, LLC.

DRAWING INVALID IF PROJECT NAME & SITE ADDRESS IS INDICATED ANYWHERE
MIKE J. NELSON
2-10-26
ARIZONA, U.S.A.

SIP ENGINEERING CONSULTANTS, LLC
14845 SW MURRAY SCHOLLS DR. SUITE 110 PMB 306 BEAVERTON, OR 97007
PHONE : 503-564-4178
Mike@SIPconsultants.com

UNITS:	FT-IN
SHEET FORMAT:	ARCH C
SHEET SCALE:	NONE
CREATED BY:	MN
RELEASE DATE:	2/10/2026
SHEET:	S5

2 DOOR CASITA
MODEL # BXB-000009

CLIENT: BOXABL INC.
5345 EAST NORTH BELT ROAD
NORTH LAS VEGAS, NV 89115, USA
+1(702) 500-9000 HELLO@BOXABL.COM

SHEET NAME: FLOOR, WALL, ROOF PLAN & DETAILS

BOXABL

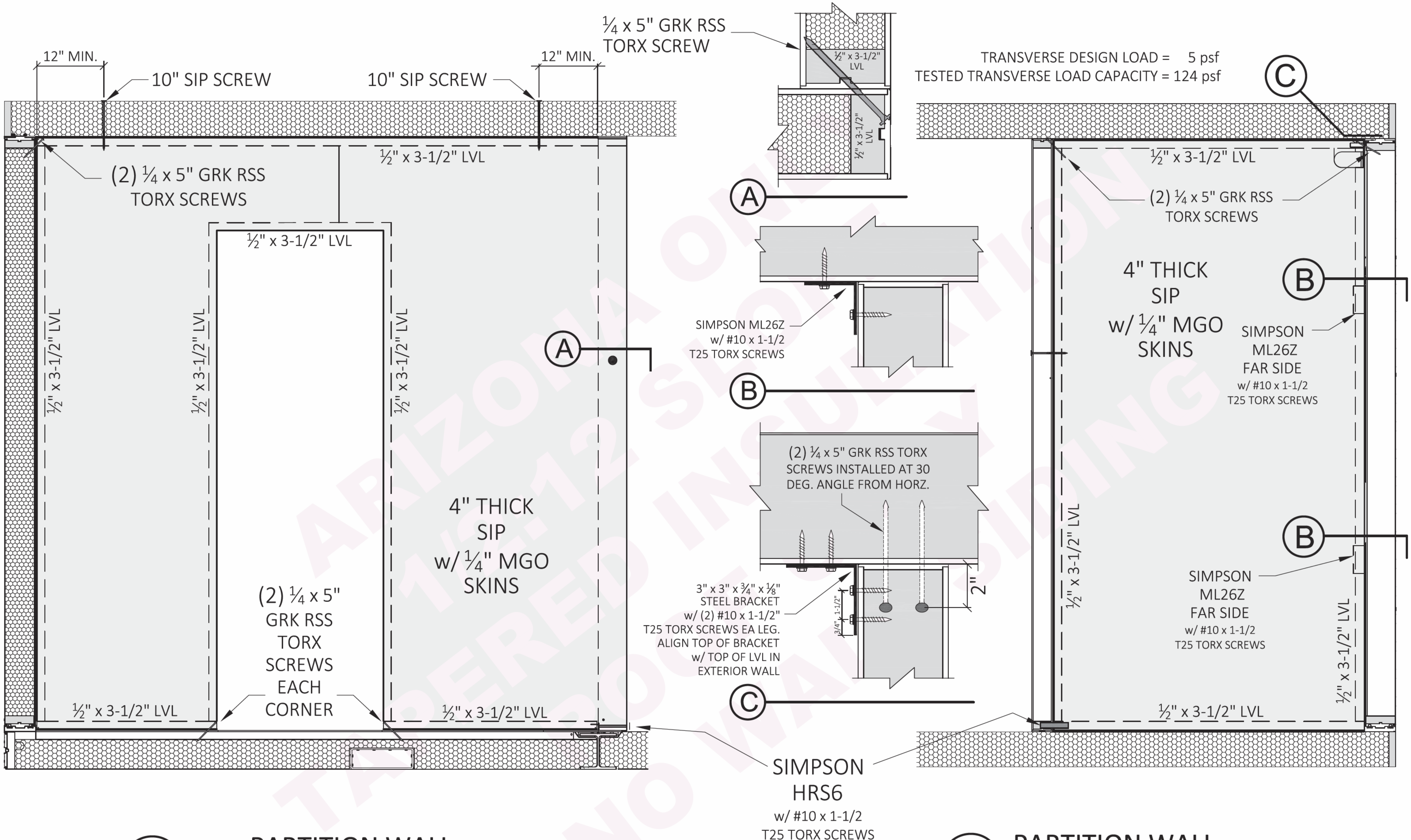

W — PARTITION WALL
SCALE: NONE

X — PARTITION WALL
SCALE: NONE

STATE OF ARIZONA
REFER TO SHEET #1

Apr 03 2026

Review of this document does not authorize or approve any omission or deviation from the applicable standards

F9080-10

EXPIRES 6-30-26

DATE:	REV:	DESCRIPTION:

* CONFIDENTIAL

AS INSTRUMENTS OF SERVICE, THESE DRAWINGS SHALL REMAIN THE PROPERTY OF SIP ENGINEERING CONSULTANTS, LLC WHO SHALL RETAIN ALL COMMON LAW, STATUTORY & OTHER RESERVED RIGHTS, WITH RESPECT TO: 1) TECHNICAL INFORMATION NOT (DETERMINED & PROVIDED) BY BOXABL, INC. 2) THE OVERALL AESTHETIC & LAYOUT PRESENTATION, INCLUDING POSITIONING OF DRAWING ELEMENTS, SHADING, HATCHING, ETC. REPRODUCTION IS PROHIBITED WITHOUT THE EXPRESSED, WRITTEN PERMISSION OF SIP ENGINEERING CONSULTANTS, LLC.

DRAWINGS INVALID IF PROJECT NAME & SITE ADDRESS IS INDICATED ANYWHERE

MIKE J. NELSON — ARIZONA, U.S.A. — 2-10-26

SIP ENGINEERING CONSULTANTS, LLC

14845 SW MURRAY SCHOLLS DR. SUITE 110 PMB 306
BEAVERTON, OR 97007
PHONE : 503-564-4178
Mike@SIPconsultants.com

UNITS:	FT-IN
SHEET FORMAT:	ARCH C
SHEET SCALE:	NONE
CREATED BY:	MN
RELEASE DATE:	2/10/2026
SHEET:	S5.1

2 DOOR CASITA
MODEL # BXB-000009

CLIENT: BOXABL INC.
5345 EAST NORTH BELT ROAD
NORTH LAS VEGAS, NV 89115, USA
+1(702) 500-9000 HELLO@BOXABL.COM

SHEET NAME: INTERIOR PARTITION WALLS

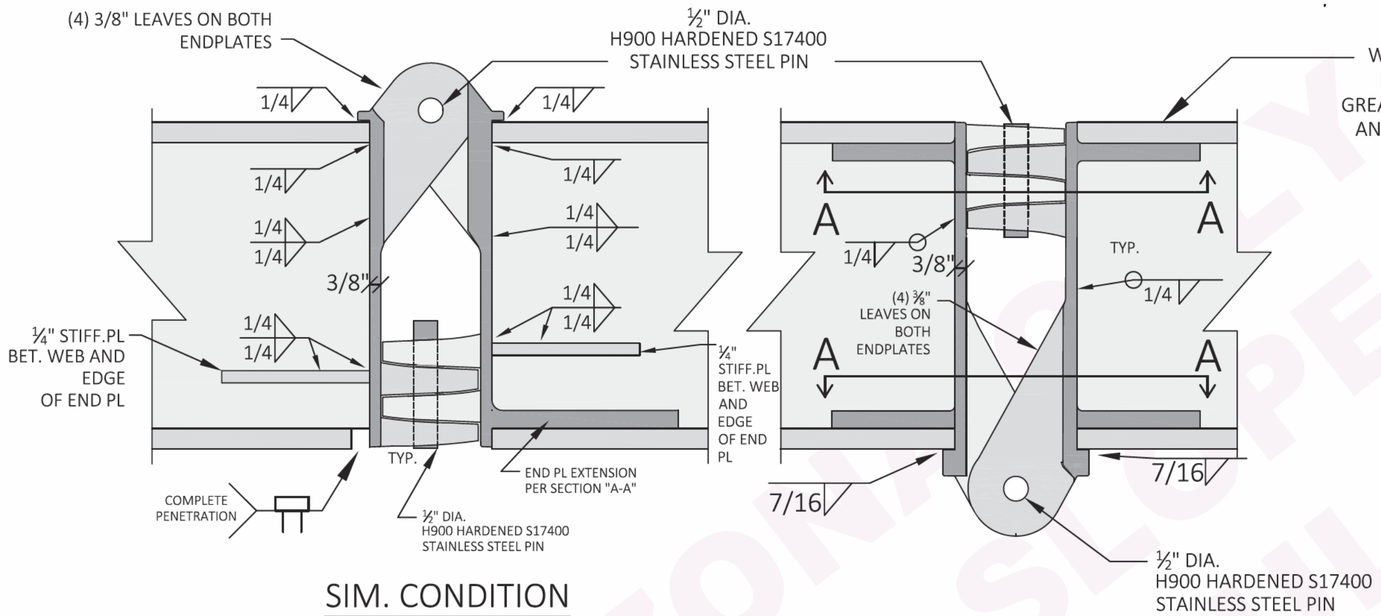

SIM. CONDITION

O ROOF BEAM HINGE CAST MONOLITHICALLY w/ END PLATES

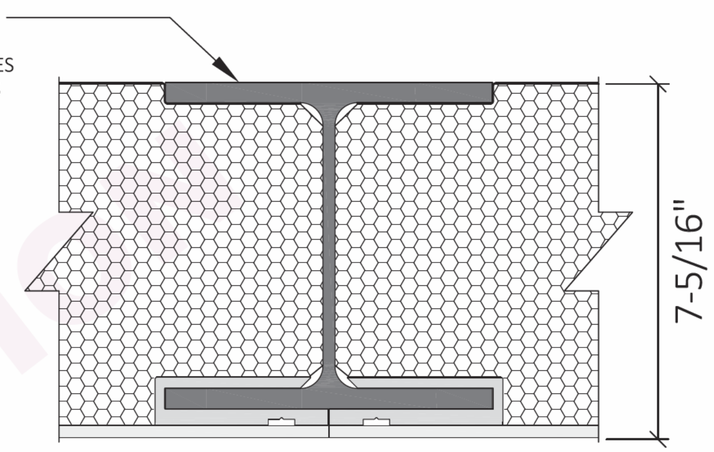

P ROOF HINGE BEAM

SCALE: NONE

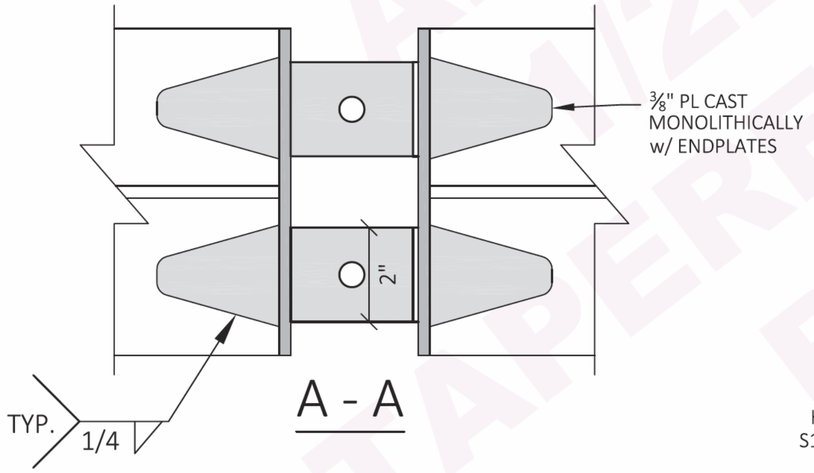

A - A

STEEL ELECTRODE SHALL CONFORM TO AWS 5.1, E70XX.

ALL WELDED CONNECTION SHALL BE WELDED ACCORDING TO THE "STRUCTURAL WELDING CODE - STEEL", AWS-D1.1, LATEST EDITION. WELDNG SHALL BE PERFORMED BY WELDERS CERTIFIED FOR THE WELDS TO BE MADE.

MATERIALS TO BE SUPPLIED BY CERTIFIED FABRICATORS. SPECIAL INSPECTION OF WELDS IS REQUIRED

STEEL MATERIAL PROPERTIES:

HINGE BEAM: ASTM A36 (MIN. Fy = 36 ksi, MIN. Ftu = 58 ksi)
HINGE : ASTM A572 GR. 50 (MIN. Fy = 50 ksi, MIN. Ftu = 65 ksi)

HINGE BEAM PINS: H900 HARDENED S17400 S.S.
(MIN. Fy = 170 ksi, MIN. Ftu = 190 ksi)

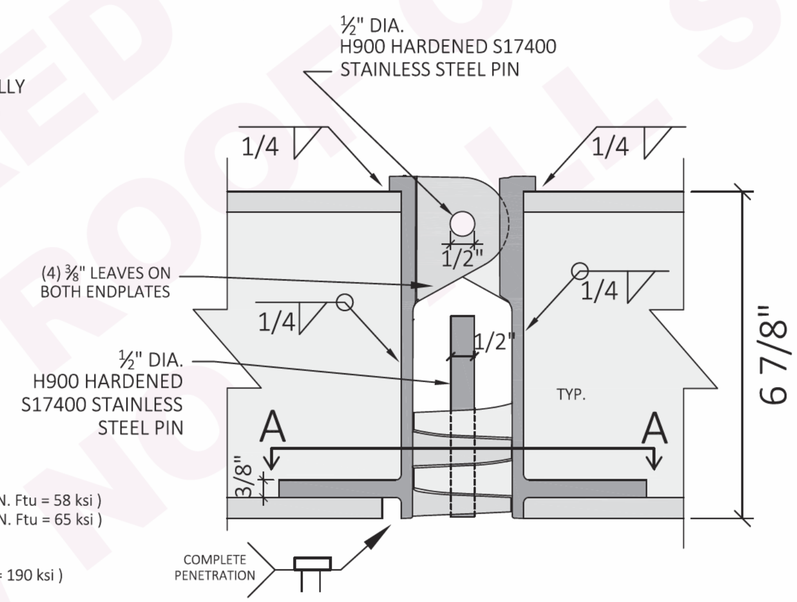

Q FLOOR HINGE CAST MONOLITHICALLY

SCALE: NONE

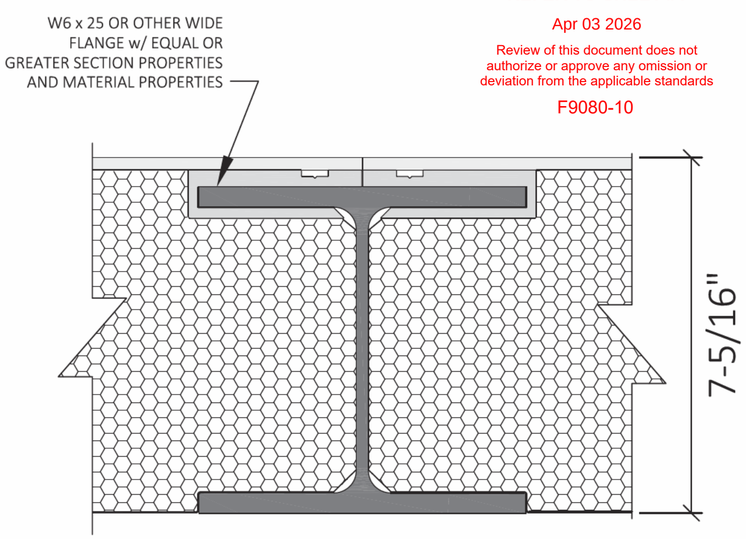

R FLOOR HINGE BEAM

SCALE: NONE

STATE OF ARIZONA
REFER TO SHEET #1

Apr 03 2026

Review of this document does not authorize or approve any omission or deviation from the applicable standards

F9080-10

ARIZONA 12:12 SLOPE TAPERED INSULATION ROOF ONLY W/ NO SIDING

*Copyright© 2024 (text, shading, hatching)
SIP Engineering Consultants, LLC
All Rights Reserved

EXPIRES 6-30-26

DATE:	REV:	DESCRIPTION:

* CONFIDENTIAL
AS INSTRUMENTS OF SERVICE, THESE DRAWINGS SHALL REMAIN THE PROPERTY OF SIP ENGINEERING CONSULTANTS, LLC WHO SHALL RETAIN ALL COMMON LAW, STATUTORY & OTHER RESERVED RIGHTS, WITH RESPECT TO: 1) TECHNICAL INFORMATION NOT (DETERMINED & PROVIDED) BY BOXABL, INC. 2) THE OVERALL AESTHETIC & LAYOUT PRESENTATION, INCLUDING POSITIONING OF DRAWING ELEMENTS, SHADING, HATCHING, ETC. REPRODUCTION IS PROHIBITED WITHOUT THE EXPRESSED, WRITTEN PERMISSION OF SIP ENGINEERING CONSULTANTS, LLC.

DRAWING IS VALID IF PROJECT NAME & SITE ADDRESS IS INDICATED ANYWHERE

REGISTERED PROFESSIONAL ENGINEER (CIVIL) MIKE J. NELSON ARIZONA, U.S.A. Date Signed 2-10-26

SIP ENGINEERING CONSULTANTS, LLC
14845 SW MURRAY SCHOLLS DR.
SUITE 110 PMB 306
BEAVERTON, OR 97007
PHONE : 503-564-4178
Mike@SIPconsultants.com

UNITS:	FT-IN
SHEET FORMAT:	ARCH C
SHEET SCALE:	NONE
CREATED BY:	MN
RELEASE DATE:	2/10/2026
SHEET:	S6

2 DOOR CASITA
MODEL # BXB-000009

SHEET NAME: STEEL BEAM HINGES

CLIENT: BOXABL INC.
5345 EAST NORTH BELT ROAD
NORTH LAS VEGAS, NV 89115, USA
+1(702) 500-9000 HELLO@BOXABL.COM

BOXABL

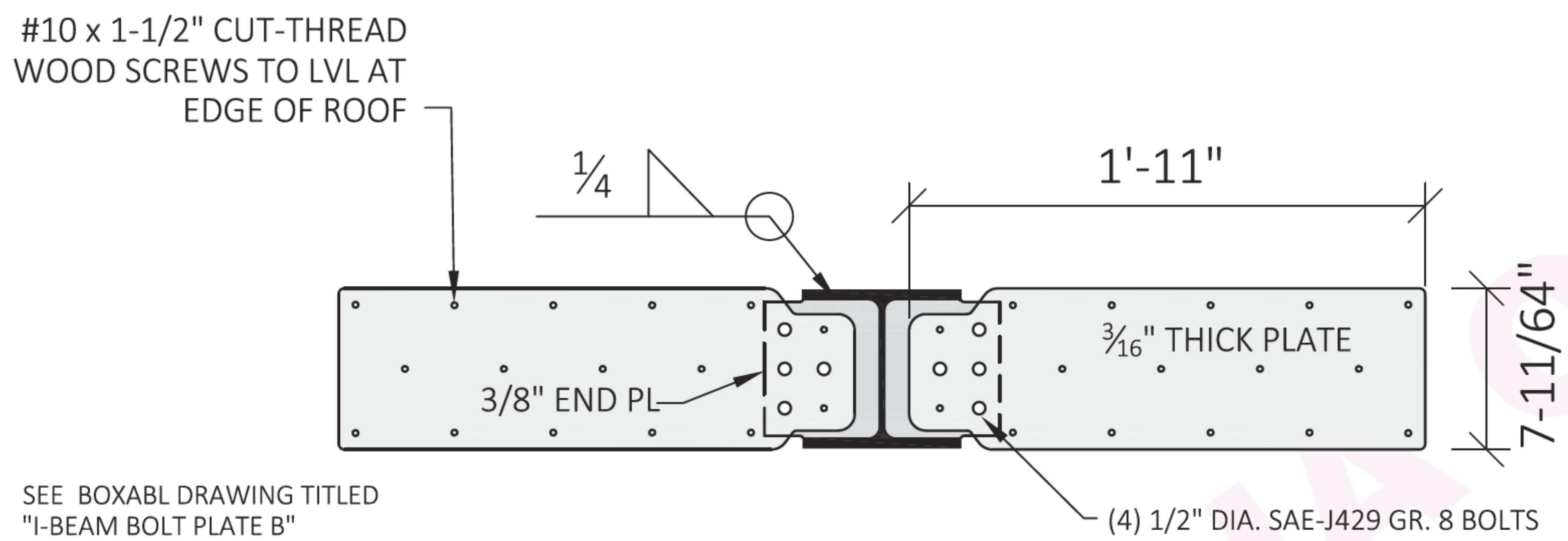

SEE BOXABL DRAWING TITLED "I-BEAM BOLT PLATE B" PART NO. P-STP-IBP-0005 FOR HOLE LOCATIION INFO. PART NO. P-STP-IBP-0005

S HINGE BEAM END PLATE

SCALE: NONE

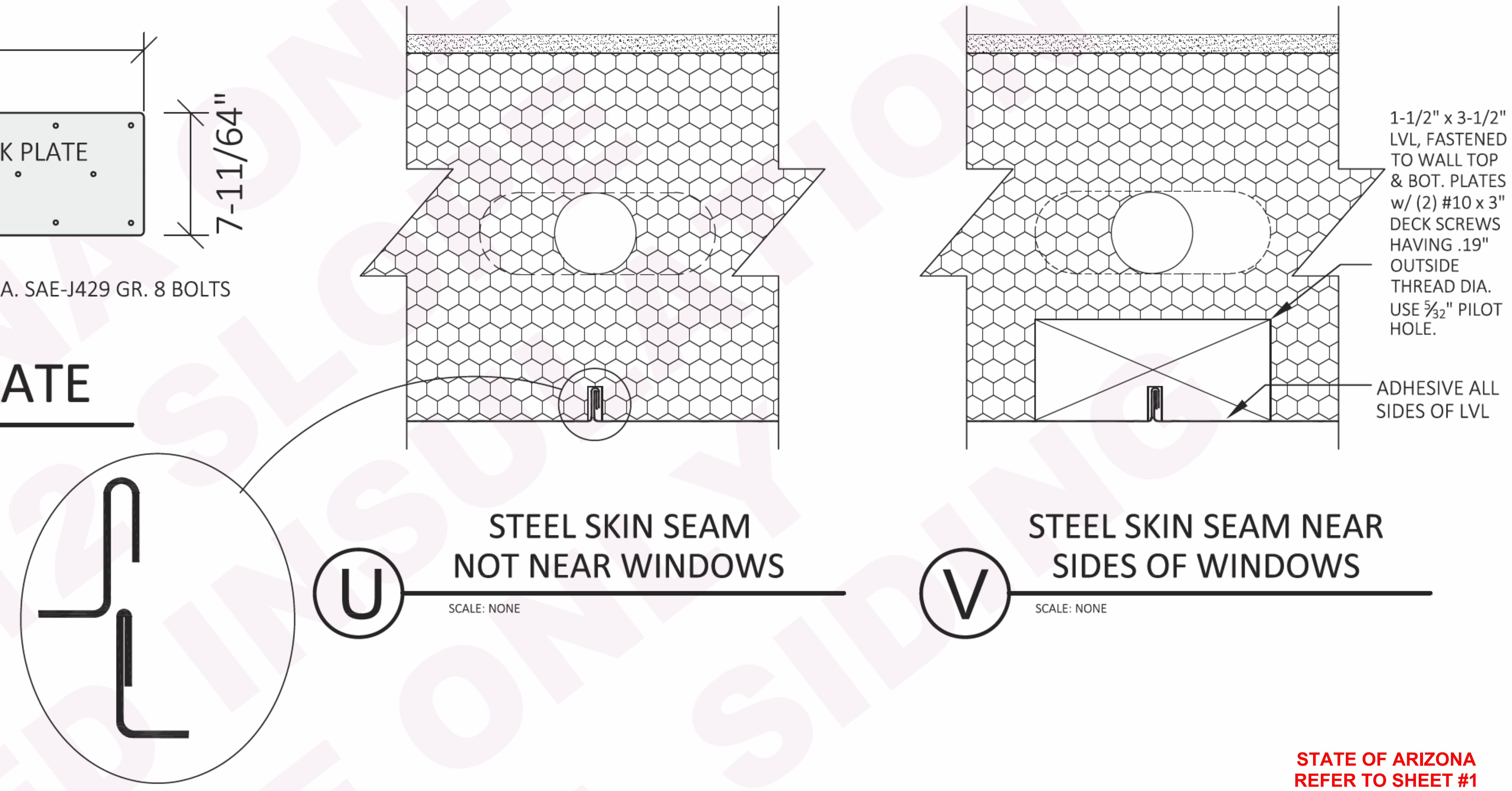

U STEEL SKIN SEAM NOT NEAR WINDOWS

SCALE: NONE

V STEEL SKIN SEAM NEAR SIDES OF WINDOWS

SCALE: NONE

STATE OF ARIZONA
REFER TO SHEET #1
Apr 03 2026
Review of this document does not authorize or approve any omission or deviation from the applicable standards
F9080-10

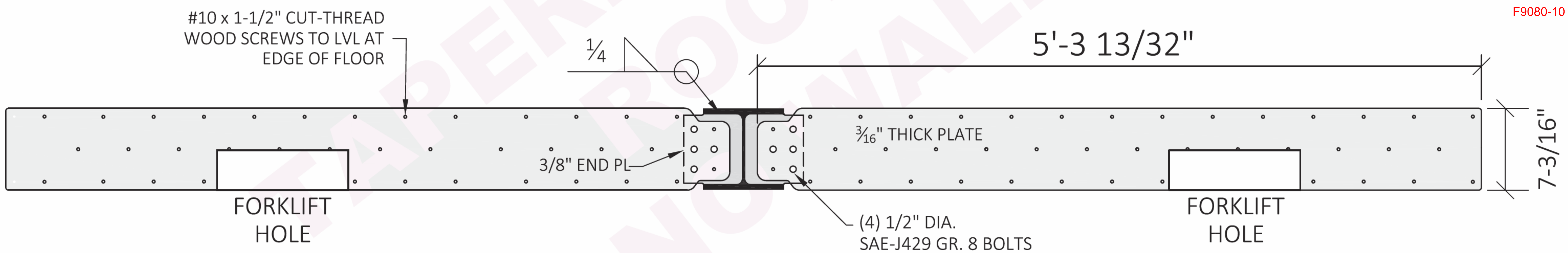

T FLOOR HINGE BEAM END PLATES AT RIGHT SIDE

SCALE: NONE

SEE BOXABL DRAWING TITLED "FORK TUBE PLATE A 1.2" PART NO. P-STP-FTP-0003 FOR HOLE LOCATIION INFO.

* Copyright© 2024 (text, shading, hatching)
SIP Engineering Consultants, LLC
All Rights Reserved

EXPIRES 6-30-26

DATE:	REV:	DESCRIPTION:

* CONFIDENTIAL
AS INSTRUMENTS OF SERVICE, THESE DRAWINGS SHALL REMAIN THE PROPERTY OF SIP ENGINEERING CONSULTANTS, LLC WHO SHALL RETAIN ALL COMMON LAW, STATUTORY & OTHER RESERVED RIGHTS, WITH RESPECT TO: 1) TECHNICAL INFORMATION NOT (DETERMINED & PROVIDED) BY BOXABL, INC. 2) THE OVERALL AESTHETIC & LAYOUT PRESENTATION, INCLUDING POSITIONING OF DRAWING ELEMENTS, SHADING, HATCHING, ETC. REPRODUCTION IS PROHIBITED WITHOUT THE EXPRESSED, WRITTEN PERMISSION OF SIP ENGINEERING CONSULTANTS, LLC.

DRAWINGS INVALID IF PROJECT NAME & SITE ADDRESS IS INDICATED ANYWHERE
MIKE J. NELSON
2-10-26
ARIZONA, U.S.A.

SIP ENGINEERING CONSULTANTS, LLC
14845 SW MURRAY SCHOLLS DR. SUITE 110 PMB 306
BEAVERTON, OR 97007
PHONE : 503-564-4178
Mike@SIPconsultants.com

UNITS:	FT-IN
SHEET FORMAT:	ARCH C
SHEET SCALE:	NONE
CREATED BY:	MN
RELEASE DATE:	2/10/2026
SHEET:	S7

2 DOOR CASITA
MODEL # BXB-000009

CLIENT: BOXABL INC.
5345 EAST NORTH BELT ROAD
NORTH LAS VEGAS, NV 89115, USA
+1(702) 500-9000 HELLO@BOXABL.COM

SHEET NAME: STEEL BEAM ENDPLATES

TAPERED INSUL. / EPDM

DESIGNED, SUPPLIED, & SITE-INSTALLED BY OTHERS

SEE SHEET S9 FOR ADD'L INFO.

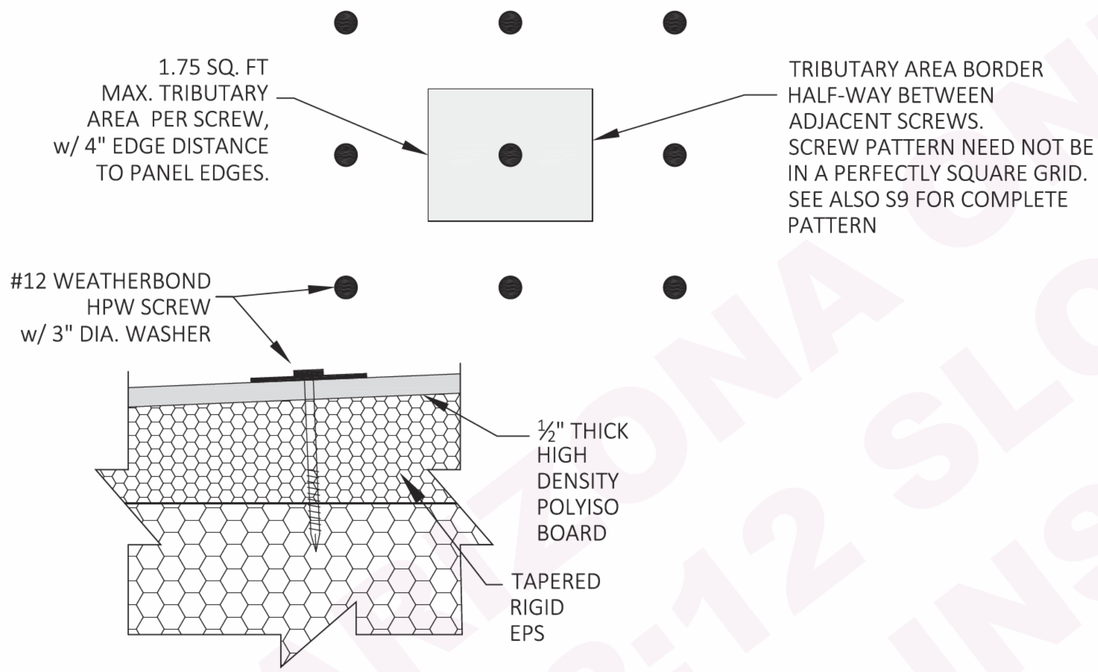

B TAPERED INSULATION ANCHORS

MAXIMUM ALLOWED AVERAGE TAPERED INSULATION WEIGHT: 2.35 psf (EPS + ½" POLYISO BOARD) AND INCLUDES 1.73 psf ALLOTTED FOR A FULLY-ADHERED EPDM MEMBRANE

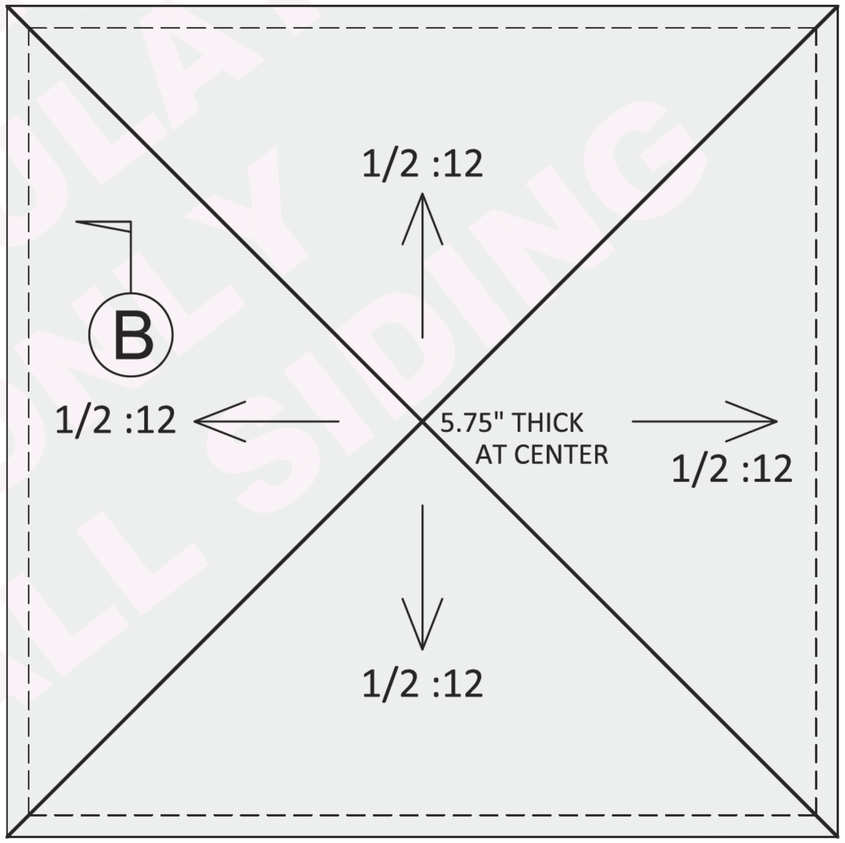

ROOF PLAN

STATE OF ARIZONA
REFER TO SHEET #1

Apr 03 2026

Review of this document does not authorize or approve any omission or deviation from the applicable standards

F9080-10

SEE ARCHITECTURAL DRAWINGS FOR MORE INFO ON: ROOF SLOPE, TAPERED THICKNESS, DENSITY, AND COVERING MATERIALS.

ARIZONA ONLY
TAPERED INSULATION
1/2:12 SLOPE
ROOF ONLY
w/ NO WALL SIDING

EXPIRES 6-30-26

DATE:	REV:	DESCRIPTION:

* CONFIDENTIAL
AS INSTRUMENTS OF SERVICE, THESE DRAWINGS SHALL REMAIN THE PROPERTY OF SIP ENGINEERING CONSULTANTS, LLC WHO SHALL RETAIN ALL COMMON LAW, STATUTORY & OTHER RESERVED RIGHTS, WITH RESPECT TO: 1) TECHNICAL INFORMATION NOT (DETERMINED & PROVIDED) BY BOXABL, INC. 2) THE OVERALL AESTHETIC & LAYOUT PRESENTATION, INCLUDING POSITIONING OF DRAWING ELEMENTS, SHADING, HATCHING, ETC. REPRODUCTION IS PROHIBITED WITHOUT THE EXPRESSED, WRITTEN PERMISSION OF SIP ENGINEERING CONSULTANTS, LLC.

DRAWING IS INVALID IF PROJECT NAME & SITE ADDRESS IS INDICATED ANYWHERE

REGISTERED PROFESSIONAL ENGINEER (CIVIL) MIKE J. NELSON 2-10-26 Date Signed ARIZONA, U.S.A.

SIP ENGINEERING CONSULTANTS, LLC
14845 SW MURRAY SCHOLLS DR.
SUITE 110 PMB 306
BEAVERTON, OR 97007
PHONE : 503-564-4178
Mike@SIPconsultants.com

UNITS:	FT-IN
SHEET FORMAT:	ARCH C
SHEET SCALE:	NONE
CREATED BY:	MN
RELEASE DATE:	2/10/2026
SHEET:	S8

2 DOOR CASITA
MODEL # BXB-000009

CLIENT: BOXABL INC.
5345 EAST NORTH BELT ROAD
NORTH LAS VEGAS, NV 89115, USA
+1(702) 500-9000 HELLO@BOXABL.COM

SHEET NAME: TAPERED ROOF INSULATION PLAN & DETAIL

BOXABL

ITEM NO.	PART NUMBER	DESCRIPTION	MATERIAL	QTY.	USE UOM
1	HRD-000136	3" ROUND INSULATION FASTENING PLATE 26GA GALVANIZED STEEL	.020 GALVANIZED STEEL	335	EA
2	HRD-000139	#12 X 6IN DRILL POINT ROOFING SCREW	STEEL	65	EA
3	HRD-000138	#12 X 4IN DRILL POINT ROOFING SCREW	STEEL	115	EA
4	HRD-000137	#12 X 2.25IN DRILL POINT ROOFING SCREW	STEEL	155	EA

USE HRD-000139, 6" SCREW IN GREEN AREA
USE HRD-000138, 4" SCREW IN BLUE AREA
USE HRD-000137, 2.25" SCREW IN ORANGE AREA

TYP #12 X 2.25 DRILL POINT ROOFING SCREW (HRD-000137)

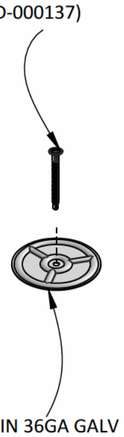

TYP #12 X 3IN 36GA GALV STEEL INSULATION WASHER (HRD-000136)

BACK FIXED WALL

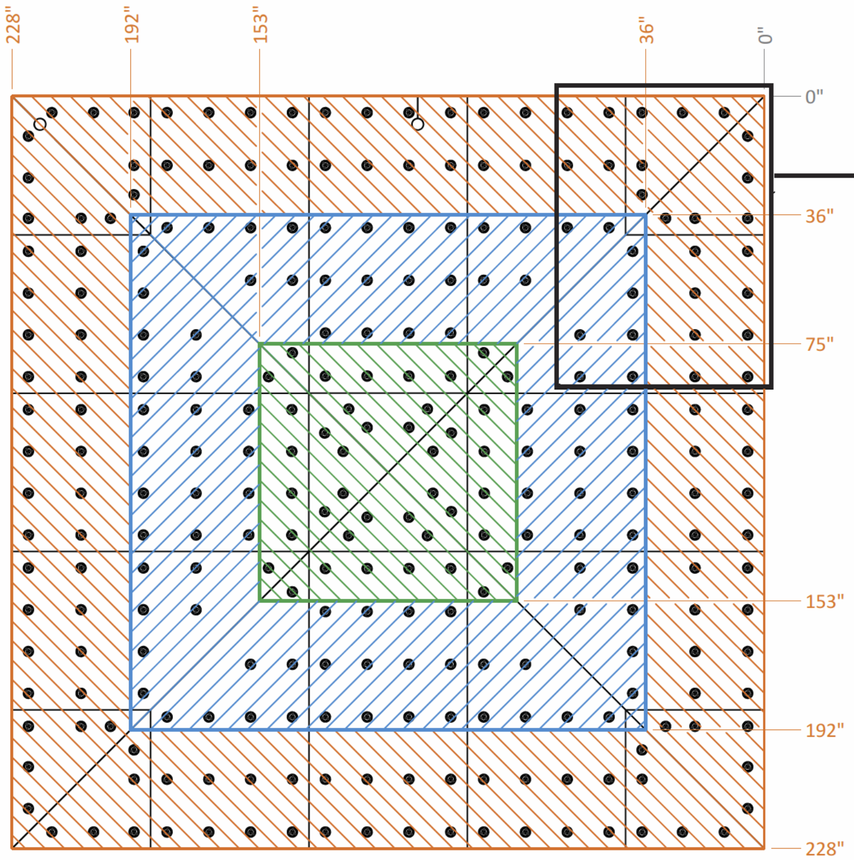

STATE OF ARIZONA
REFER TO SHEET #1

Apr 03 2026

Review of this document does not authorize or approve any omission or deviation from the applicable standards

F9080-10

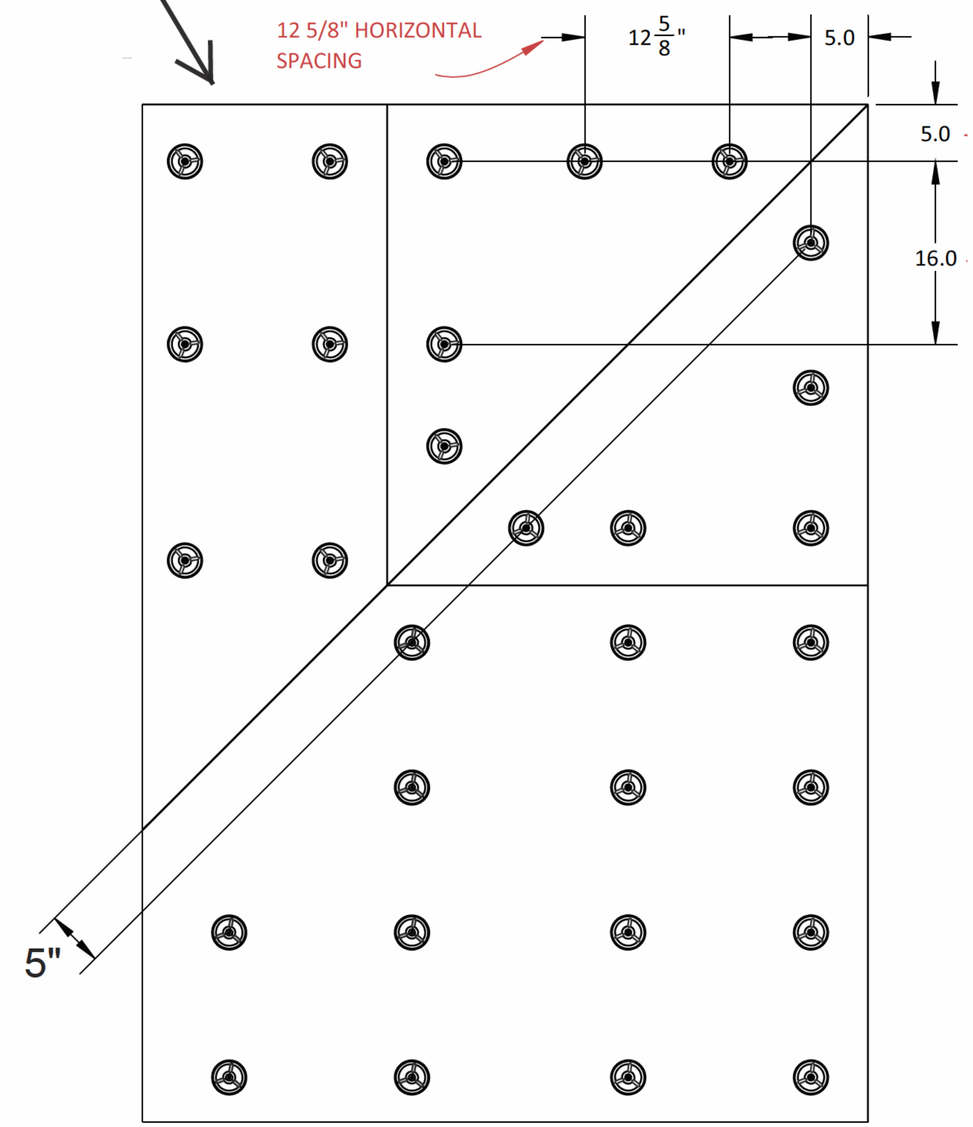

EXPIRES 6-30-26

DATE:	REV:	DESCRIPTION:

* CONFIDENTIAL
AS INSTRUMENTS OF SERVICE, THESE DRAWINGS SHALL REMAIN THE PROPERTY OF SIP ENGINEERING CONSULTANTS, LLC WHO SHALL RETAIN ALL COMMON LAW, STATUTORY & OTHER RESERVED RIGHTS, WITH RESPECT TO: 1) TECHNICAL INFORMATION NOT (DETERMINED & PROVIDED) BY BOXABL, INC. 2) THE OVERALL AESTHETIC & LAYOUT PRESENTATION, INCLUDING POSITIONING OF DRAWING ELEMENTS, SHADING, HATCHING, ETC. REPRODUCTION IS PROHIBITED WITHOUT THE EXPRESSED, WRITTEN PERMISSION OF SIP ENGINEERING CONSULTANTS, LLC.

DRAWING IS INVALID IF PROJECT NAME & SITE ADDRESS IS INDICATED ANYWHERE

REGISTERED PROFESSIONAL ENGINEER (CIVIL) MIKE J. NELSON 2-10-26 Date Signed ARIZONA, U.S.A.

SIP ENGINEERING CONSULTANTS, LLC
14845 SW MURRAY SCHOLLS DR.
SUITE 110 PMB 306
BEAVERTON, OR 97007
PHONE : 503-564-4178
Mike@SIPconsultants.com

UNITS:	FT-IN
SHEET FORMAT:	ARCH C
SHEET SCALE:	NONE
CREATED BY:	MN
RELEASE DATE:	2/10/2026
SHEET:	S9

2 DOOR CASITA
MODEL # BXB-000009

CLIENT: BOXABL INC.
5345 EAST NORTH BELT ROAD
NORTH LAS VEGAS, NV 89115, USA
+1(702) 500-9000 HELLO@BOXABL.COM

SHEET NAME: TAPERED ROOF INSULATION ANCHOR LAYOUT

BOXABL